VIP Dual

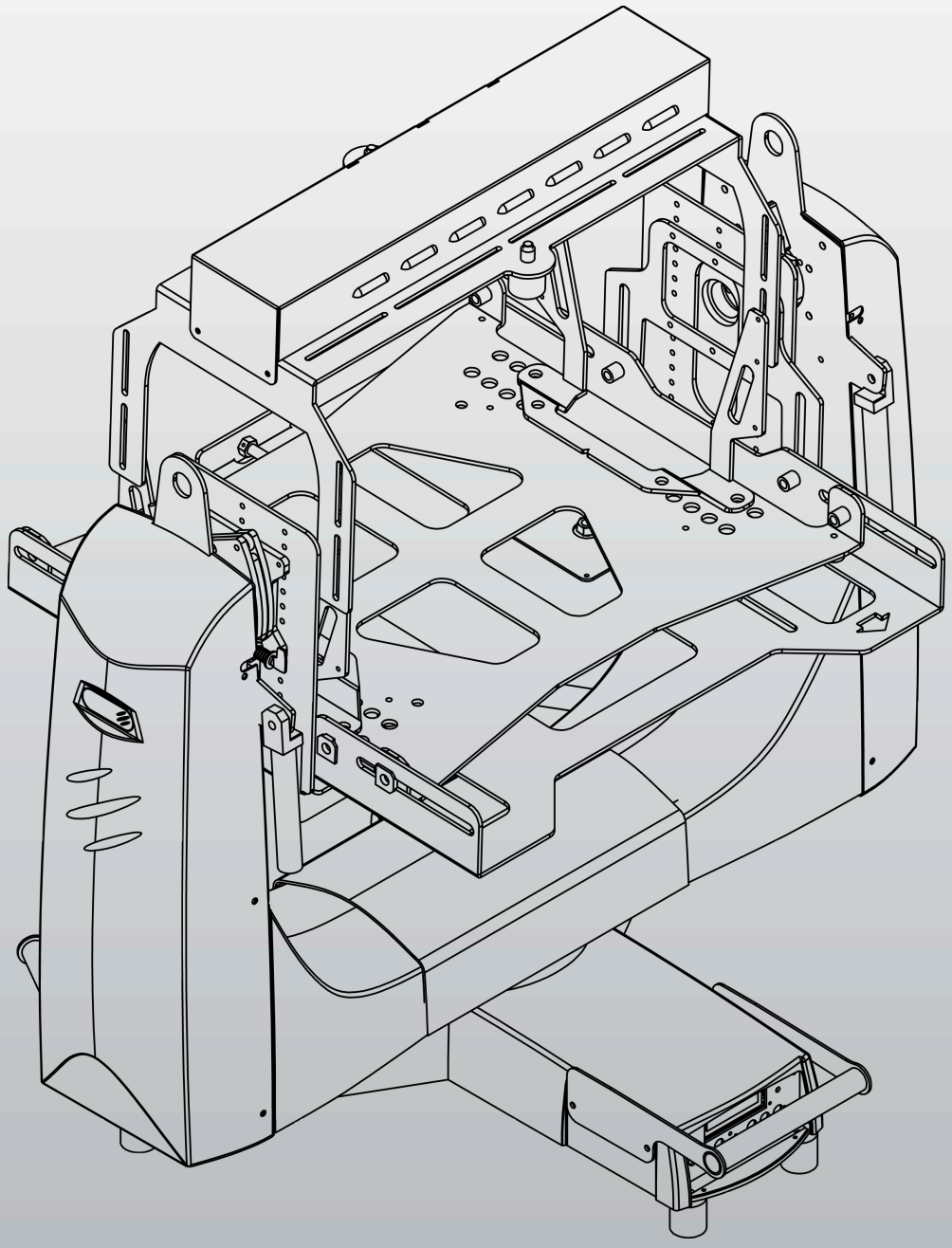

User Manual .v5

ZAP technology

Cinemeccanica France
222/226 Rue de Rosny - 93106 Montreuil Cedex France

With Christie Roadster projector as example

VIP Dual

1. Introduction Page 6

Label and Marking
General Features
Input Rating
Safety Warning
Fuse replacement
Pre-operation Checklist .

2. Overview Page 9

The Dual Arm Yoke
VIP Dual Bracket .
The Yoke
Removing the Yoke Arm Covers
The VIP Dual Base
Removing the Base Covers
Leg#1: Display Module and Motherboard
Leg#2: Power-DMX Panel and Fuse Socket
Leg#3: Input Panel
VIP Dual Compatible projector
Christie Roadster Series
Modification required
Head Kits
Rigging Accessories & Features
The EZ-Clamp
Lifting features
Weights

3. Projector Installation Page 19

Roadsters Series Lens Motor Replacement
Lens Removal
Lens Motor Set Replacement
Roadster Series Bracket
Description
Quick Lock System
Bracket Setup
Removing the Bracket from the VIP Dual
Installing the Bracket on the VIP Dual
Installing the Roadster Series Projector on the Bracket
Lens installation
Balancing the Roadster Series Projector
Making Electrical Connections
VIP Dual Head Box / Roadster Series
Description
RS232/DMX Interface Board
Zoom/Focus board

4. Operation Page 41

Pan and Tilt Movement
Description
Locking System

5. Maintenance Page 42

Safety Warning and Guidelines
General Precautions
Pre-Operation Checklist
Cleaning
Yoke
Projector
Lubrication
Chains
User-Serviceable Components
Yoke
Power Cable
Microchip
Fuses
Chain
Projector

6. Trouble Shooting Page 43

Yoke
Projector

7. Specification Page 47

Pan and Tilt Movements
Focus Control
Zoom Control
Physical
General Capabilities

Yoke Dimensions
Yoke Body
Mounting Options
Weights
VIP Dual
VIP Dual + Roadster Series Projector
Power Requirements
Voltage and Current
Fuses
Flight case
Dimensions
Weight
Empty
With VIP Dual + Roadster Series Projector
Regulatory
Environment
Optional Components

1 Introduction

The VIP Dual is an automated yoke designed exclusively for technicians with expertise in DMX technology and digital projectors.

You must read this document in its entirety to ensure the VIP Dual is installed and operated correctly. Failure to follow the instructions in this manual could result in personal injury or damage to the video projector or the VIP Dual yoke.

This product is also designed for temporary outdoor use, but must remain dry under all circumstances. Servicing of this product may only be performed by ZAP Technology accredited service technicians.

1.1 Labels and Marking

Observe and follow any warnings and instructions marked on the VIP Dual and throughout this manual:

I Danger symbols indicate a hazardous situation which, if not avoided, will result in death or serious injury.

I Warning symbols indicate a hazardous situation which, if not avoided, could result in death or serious injury.

I Caution symbols indicate a hazardous situation which, if not avoided, could result in minor or moderate injury**.**

NOTICE! *Addresses practices not related to personal injury*.

1.2 General Features

The VIP Dual is controlled by a DMX interface and offers these automated functions:

- 600° pan powered by DC servo motor – 16 bits,
- 270° tilt powered by DC servo motor – 16 bits,
- Focus powered by DC servo motors – 8 bits
- Zoom powered by DC servo motors – 8 bits

1.3 Input Rating

Zone	Voltage	Connection	Operating Current
EUROPE	230VAC 50HZ	32A SINGLE-PHASE + EARTH GROUND (YOKE ONLY)	1 A
USA	208VAC 60HZ	30A DUAL-PHASE + EARTH GROUND (YOKE ONLY)	1.8 A
ALL	200-240 VAC 50/60HZ	YOKE + PROJECTOR	23 A

Table 1-1 Operating power

1.4 Safety Warnings

- All servicing must be performed by ZAP technology accredited service technicians. Use replacement parts that are manufacturer-approved only. Use of any other part other than the ones specified by the manufacturer can result in fire, electric shock or risk of personal injury and irreparable equipment damage.
- For protection from electric shock, the VIP Dual must be grounded (earthed) to protect against electrical shock and the AC power distribution circuit must be equipped with a fuse or circuit breaker and ground-fault (earth-fault) protection.
- Disconnect the VIP Dual from AC power before removing any cover or part – including fuses – and when not in use (See ***Figure 1-1*** and ***Figure 1-2***). Covers shall only be removed by ZAP Technology accredited service technicians.
- Isolate the VIP Dual from power immediately if any power connector, power cable, seal, cover or other component is damaged, defective, deformed, wet or showing signs of overheating. Do not reconnect power until repairs have been completed and unit is completely dry.
- Do not expose the VIP Dual to rain or moisture.

This symbol appears in this manual for procedures where a Pinching or Crushing hazard between chain and sprocket exists. Keep hands clear when unit is powered. Disconnect power before servicing.

This symbol appears in this manual for procedures where a Pinching or Crushing hazard between rotating and stationary surfaces exists. Keep hands clear when unit is powered. Disconnect power before servicing or apply rotation locks.

Figure 1-1 Power cable connector Slide metal release tab and unlock

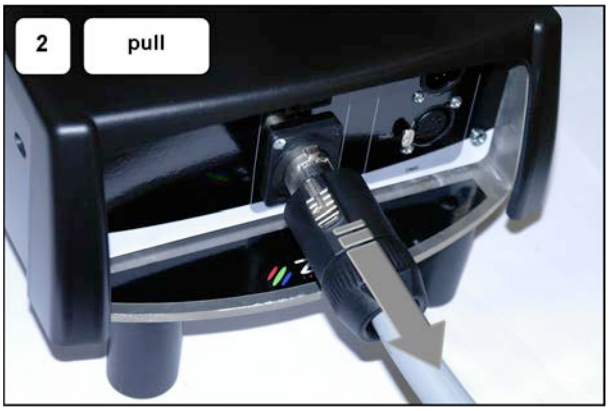

Figure 1-2 Power cable connector Remove

1.4.1 Fuse Replacement

I Disconnect the VIP Dual from power before replacing a fuse. Replace fuses with ones of the same type and rating. Never bypass or bridge a fuse. Covers shall only be removed by ZAP technology accredited service technicians.

The VIP Dual head box is protected by one fuse located next to the power switch. Use the correct replacement fuse for the zone in which it operates:

- T750mA for 200-240V
  There are also 2 fuses inside one of the legs of the base:
- T1.6A (250V) located on the power supply board (Conquer Electronics Co., Ltd # UTE1.60)
- T6.3A time delay (250V) located in an inline fuse holder (Schurter AG # 0034.3125)

1.5 Pre-operational Checklist

Before you operate the VIP Dual, check these items:

- Verify that the power cable connector is locked to the yoke base.
- Verify that the green LED is flashing on the control panel. This indicates that the yoke is receiving a DMX signal.
- Verify that the connection between the projector and the yoke is correct.
- Verify that the yoke and projector lens will not collide with other objects.
- Verify that the pan and tilt functions on the yoke are unlocked.
- Verify that the EZ-Clamps are installed securely.
- Verify that the screws on the dual bracket are tight after balancing the projector.
- Verify that the lens is properly mounted
- Verify that the yoke is properly grounded.
- Verify that the AC power complies with the local building and electrical codes and has both overload and ground-fault (earth-fault) protection.
- Verify that all power distribution equipment and cables are in good condition and rated for the requirements of the connected devices.
- Verify that the DMX distribution has XLR 5 pin connectors (***Figure 1-3***).

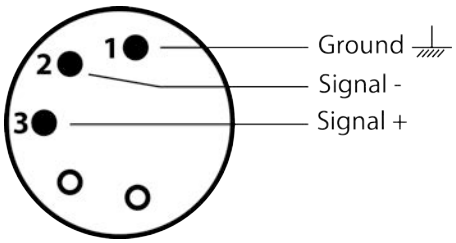

Figure 1-3 DMX512 5 PIN connector

2 Overview

2.1 The Dual Arm Yoke

The VIP Dual is comprised of the following main components (***Figure 2-1***):

- The dual arm (1)
- The base, referred to as TopBox or Tripod (2)
- Handles (3)
- Quick Locks (4)

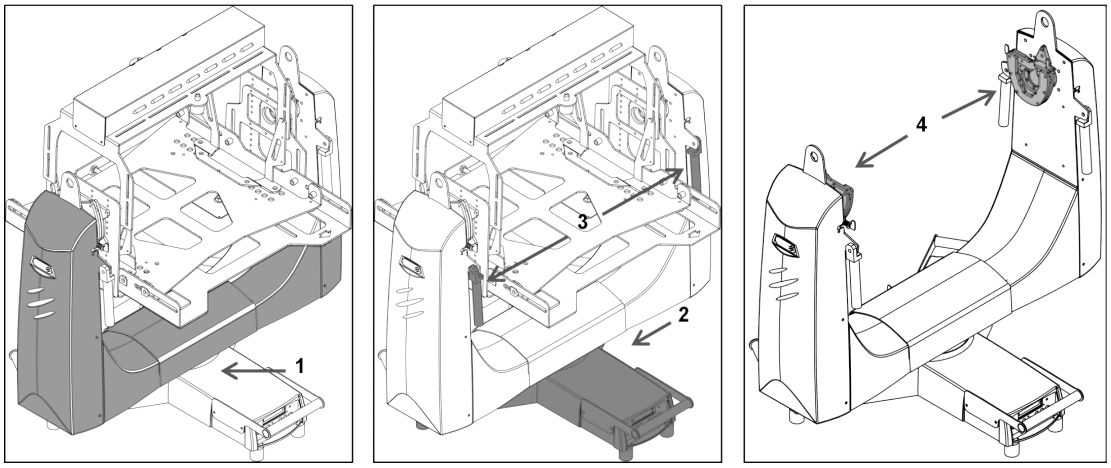

Figure 2-1 VIP Dual Components

2.1.1 VIP Dual Bracket

The VIP Dual bracket assembly contains these components (***Figure 2-2***)

- The platform (1), which accepts adaptor plates that are unique to each projector series.
- A head box (2), which provides a location for projector connections.

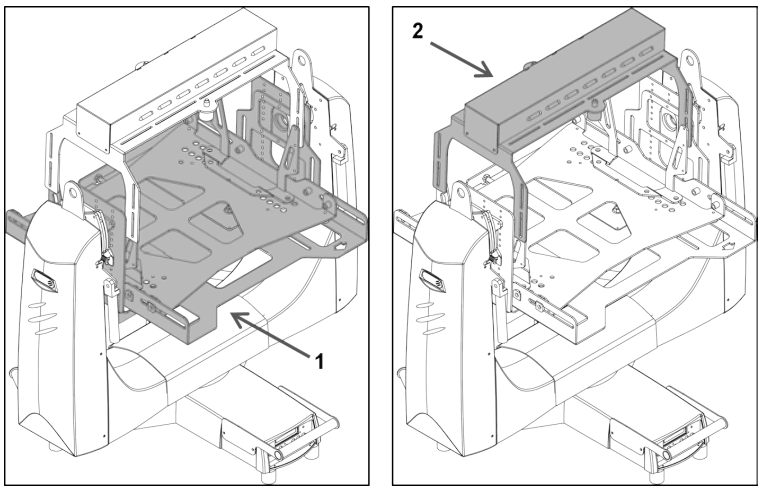

Figure 2-2 Bracket platform and head box

2.1.2 The Yoke

The yoke contains these components:

- Sub connection panel
- Pan and tilt motors
- Tilt Sensor
- Pan axis
- Pan and tilt chain stretchers

Removing the Yoke Arm Covers

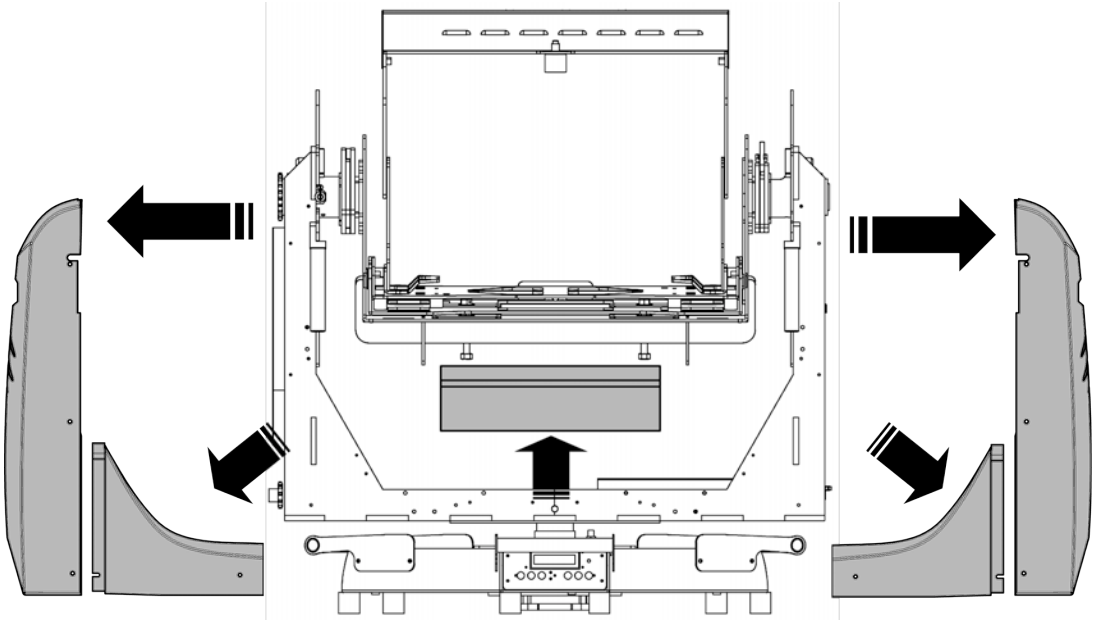

Figure 2-3 Dual arm yoke

All servicing must be performed by Cinemeccanica accredited service technicians. Use replacement parts that are manufacturer-approved only. Use of any other part other than the ones specified by the manufacturer can result in fire, electric shock or risk of personal injury and irreparable equipment damage.

1. Remove 6 screws from the vertical covers on both ends of the arm as shown in ***Figure 2-4***.This provides access to the components in ***Figure 2-5 & 2-6***.

The covers should always be in place and secured before switching projector power to ON.

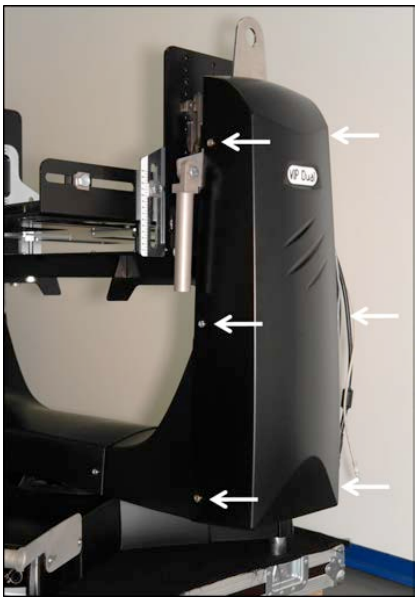

Figure 2-4 Vertical cover removal

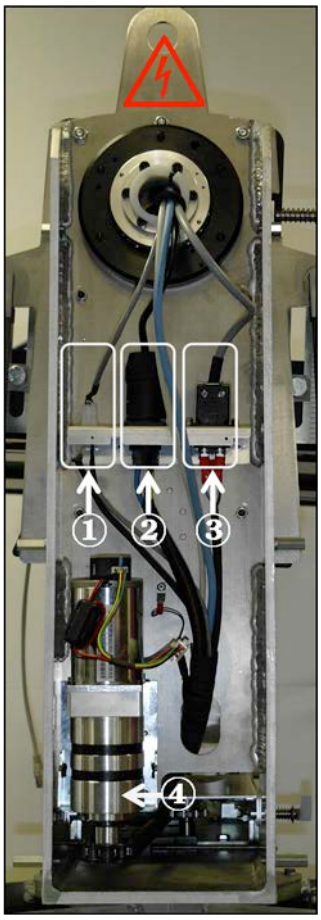

1. DMX & reset command connection
2. Video projector 30A power connection
3. Head box power supply connection
4. PAN motor

Figure 2-5 Arm #1 - Vertical components

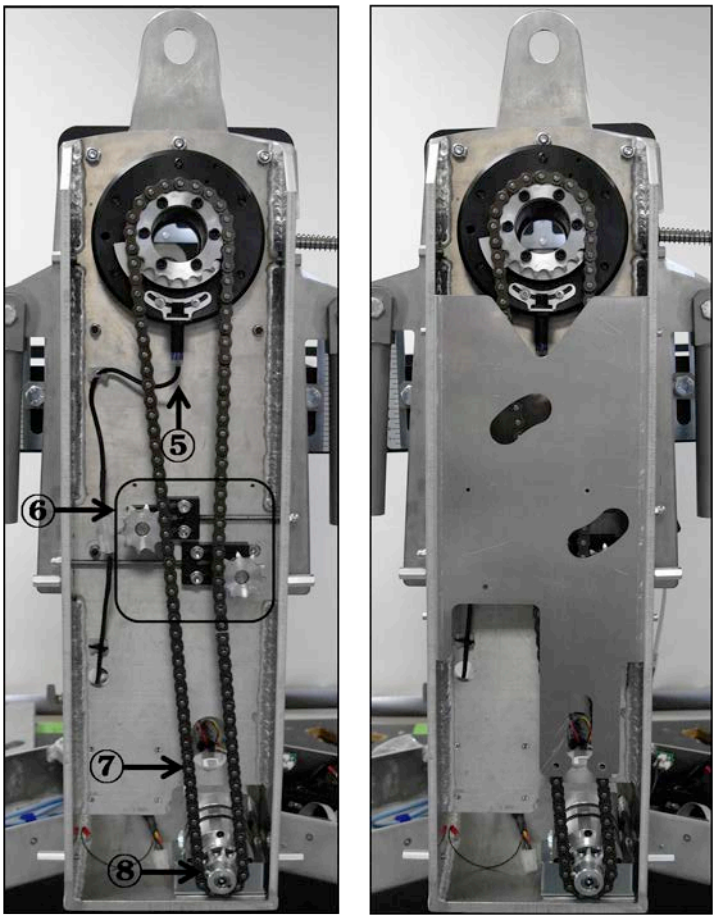

5.Tilt sensor
6.Tilt chain stretcher
7.Tilt chain
8.Tilt Motor

Figure 2-6 Arm #2 - Vertical components

2. Remove screws from the 3 horizontal covers shown in ***Figure 2-3*** to access the components in ***Figure 2-7***.

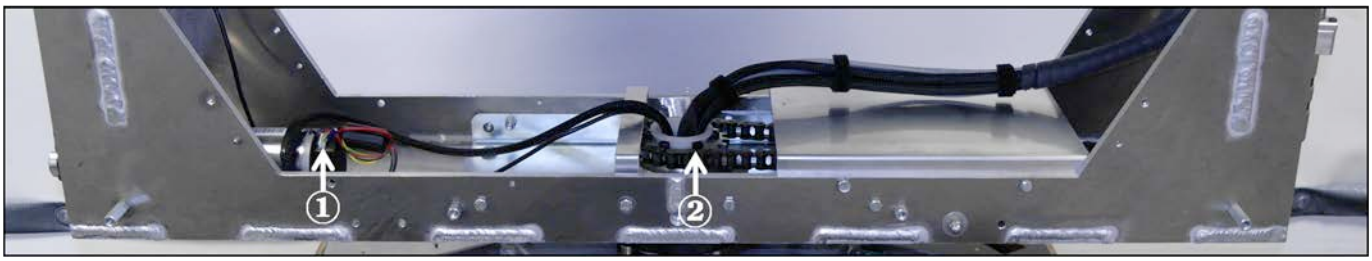

1. Tilt motor
2. Pan axis

Figure 2-7 Horizontal components

2.1.3 The VIP Dual Base

The VIP Dual base is also called **Top Box** or **Tripod**. The base (***Figure 2-8***) contains these components, each protected by an ABS cover and fitted with one handle:

- Display Module and Motherboard
- Power and DMX Connectors
- Video Connectors

I The covers should always be in place and secured before switching projector power to ON.

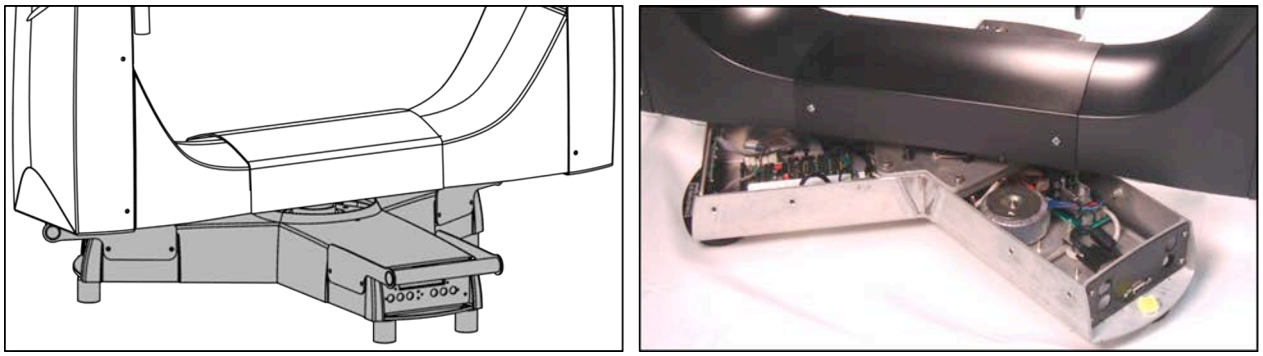

Figure 2-8 VIP Dual base with and without covers

I All servicing must be performed by Cinemeccanica accredited service technicians. Use replacement parts that are manufacturer-approved only. Use of any other part other than the ones specified by the manufacturer can result in fire, electric shock or risk of personal injury and irreparable equipment damage.

Removing the Base Covers

To remove the base covers (***Figure 2-9***):

1. Remove the 4 screws (2 on each side) securing the handle to the base frame.
2. Lift the handle from the base cover.
3. Lift the cover from the base frame.

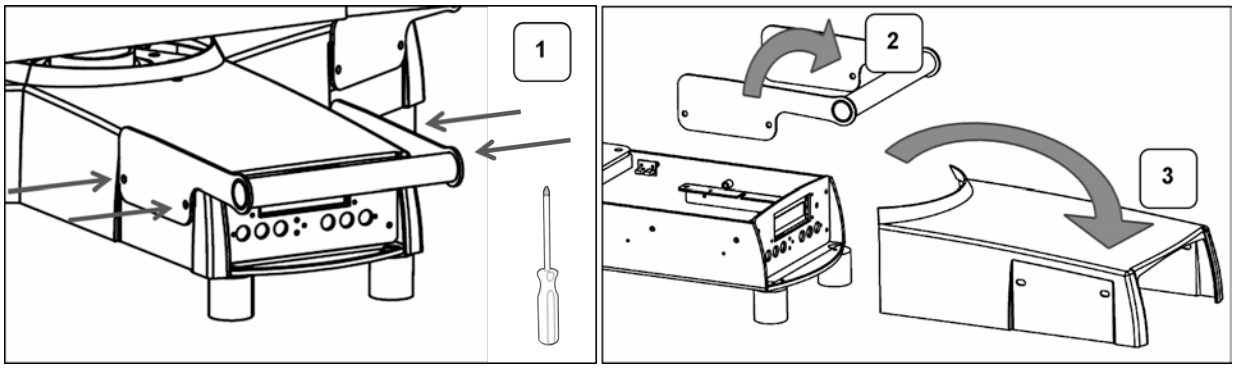

Figure 2-9 Remove base handle and cover

Leg # 1: Display Module and Motherboard

From this panel, you have access to all the projector functions.
This part also contains the Motherboard.

Figure 2-11 Motherboard CPU – Top view

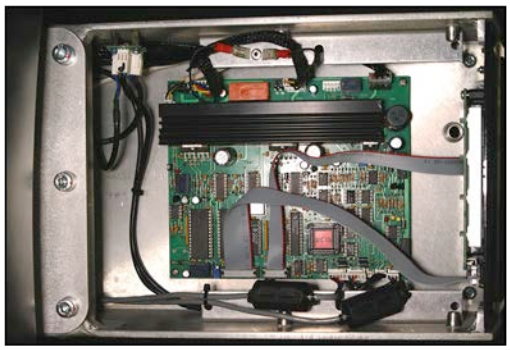

Figure 2-10 LCD display

I Disconnect the VIP Dual from AC power before removing any cover or part,

including fuses – and when not in use.
Covers shall only be removed by Cinemeccanica accredited service technicians.

Motherboard (CPU) Features

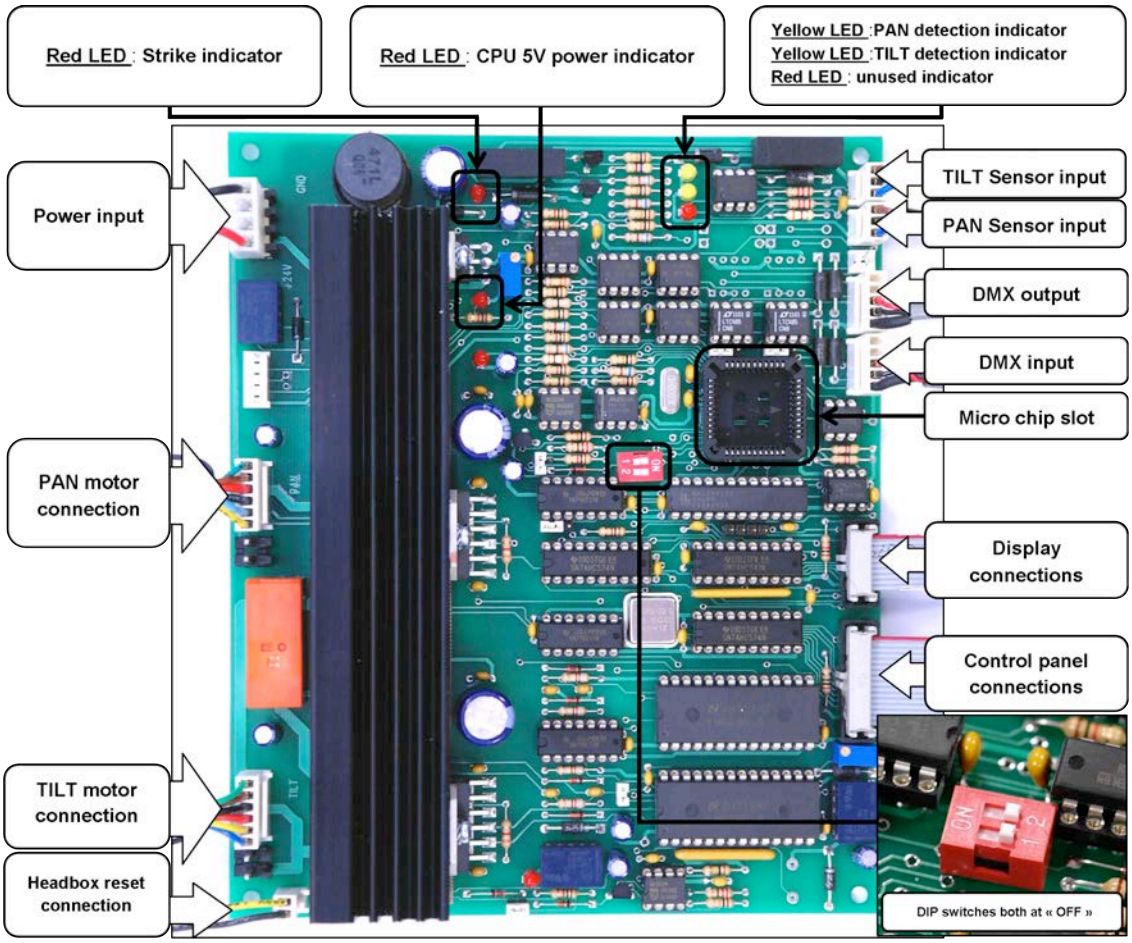

NOTE: *The DIP switches in* ***Figure 2-12*** *do not affect projector operation.*

Leg # 2 Power-DMX Panel

The Power-DMX panel includes these components (***Figure 2-13***):

1 - PowerCon connector – 30 amp single phase
2 - Power switch
3 - DMX in and thru (out)

This Leg also houses a transformer (arrow in ***Figure 2-14***) that powers the Motherboard (CPU) as well as Pan and Tilt yoke motors.

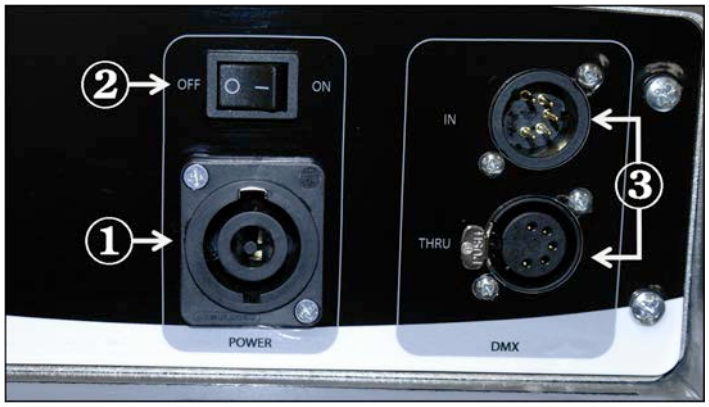

Figure 2-13 Power DMX Panel

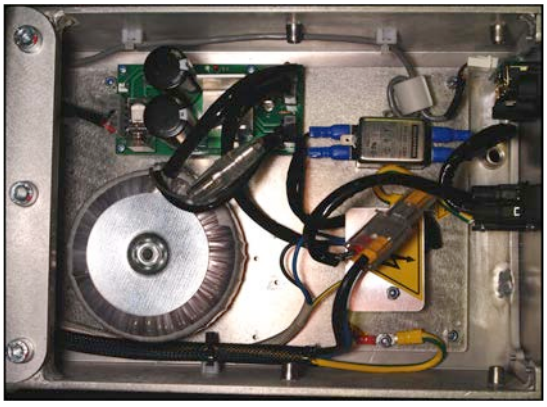

Figure 2-14 Leg#2 – Top view

I Disconnect the VIP Dual from AC power before removing any cover or part including fuses – and when not in use.
Covers shall only be removed by Cinemeccanica accredited service technicians.

Description	Voltage Range		Fuse protection
POWER SUPPLY TRANSFORMER (150 VA)	PRIMARY	208-230 V	T1.6A (250V) - USE ONLY CONQUER ELECTRONICS CO., LTD # UTE1.60)
	SECONDARY	22 V	T6.3A (250V) - USE ONLY SCHURTER AG # 0034.3125

Table 2-1 Fuses values

Leg # 3 Input Panel

This panel includes these ports (***Figure 2-15***):

1 - Ethernet Input
2 - DVI-I input
3 - Optional video format inputs

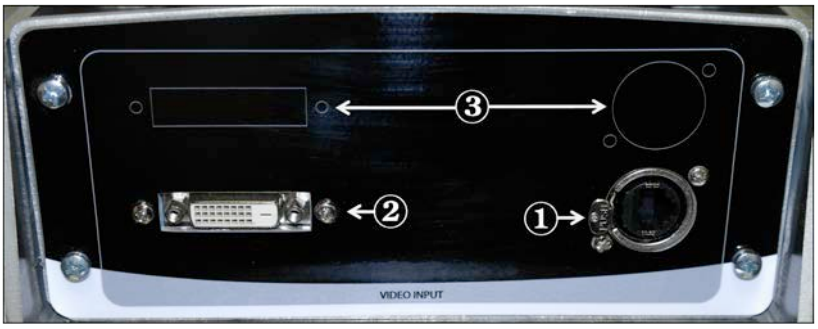

Figure 2-15 Input panel

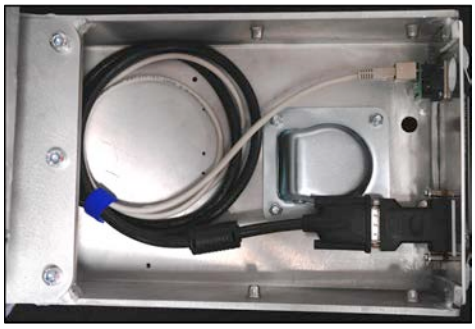

Figure 2-16 Leg#3 – Top view

2.2 VIP Dual-Compatible Projectors

Many projectors are compatibles with the ZAP Lighting yokes . As exemple we could mention:

Christie roadster series
Barco HDF W26
Panasonic PT-DZ 21 KU & Panasonic PT-EX16 KE
BARCO FLM HD 20
Etc.....

2.2.1 Christie Roadster Series as exemple

The Christie Roadster Series video projector can be mounted to the VIP Dual with a special bracket. A minor modification is required to interface with the VIP Dual, but all other Roadster features and functions are unchanged.
Refer to the Roadster Series manuals for more information.

Figure 2-17 Roadster Series front view

Figure 2-18 Roadster Series connection panel

Modifications required

Zoom and focus motors on the Roadster lens must be replaced with VIP Dual zoom/focus motors. You use the DMX protocol to control these motors.

2.3 Head Kits

Projectors are mounted to the yoke using a Head Kit comprised of:

- The VIP Dual bracket (***Figure 2-19***) and
- Adaptor plates specific to the projector series. (***Figure 2-20***)

The bracket has a **Quick Lock (**see **Quick Lock system** on ***page 3-6***), allowing simplified installation and removal.

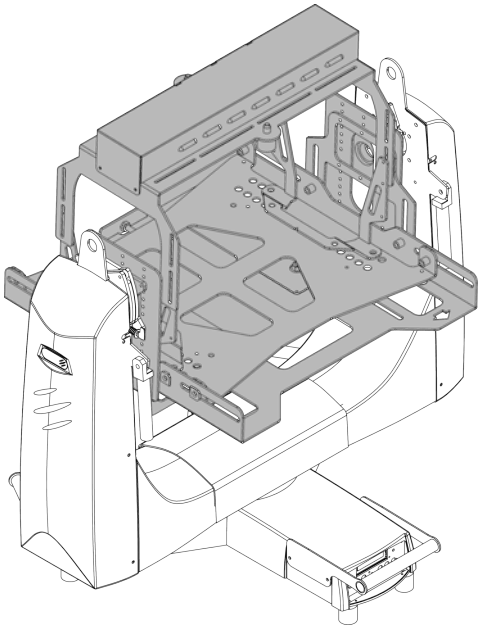

Figure 2-19 VIP Dual bracket

One type of Heads Kit is available for the VIP Dual:

- Roadster Series adaptor plates. (***Figure 2-20***)

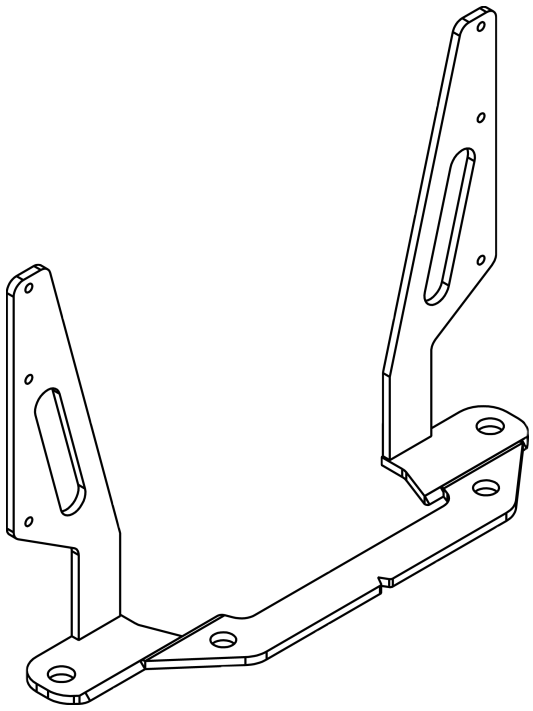

Figure 2-20 Roadster head kit adaptor plates

Figure 2-21 VIP Dual with Roadster

A typical projector configuration using the VIP Dual is shown in ***Figure 2-21***.

2.4 Rigging Accessories & Features

2.4.1 The EZ-Clamp

The EZ-Clamp is an optional accessory that provides a means for attaching the VIP Dual to a truss.

The EZ-Clamp (***Figure 2-22***) is designed to allow the VIP Dual base to be mounted either on the top or the bottom of a truss (***Figure 2-23***). Its adjustable clamps permit the EZ-Clamp to accommodate trusses of different widths.

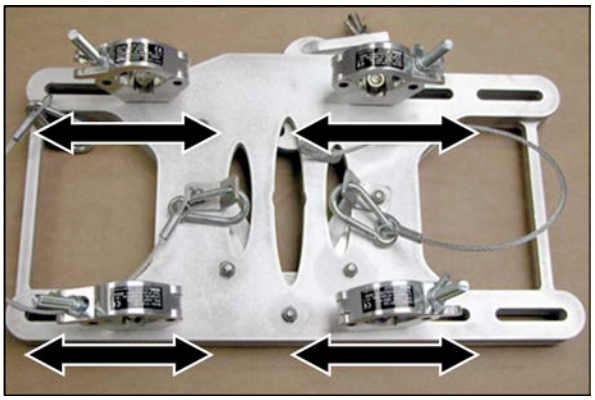

Figure 2-22 EZ-Clamp with its 4 adjustable clamps

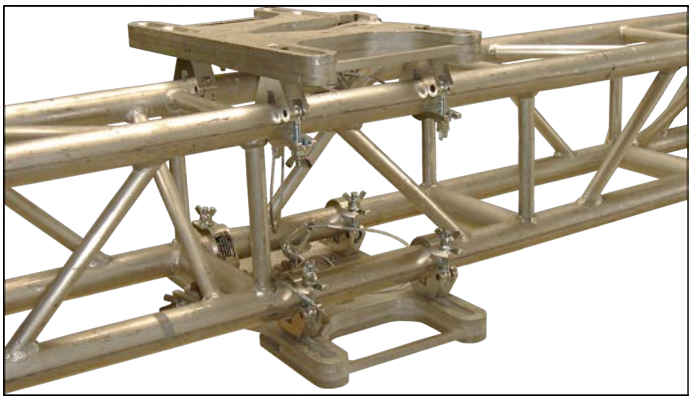

Figure 2-23 EZ-Clamp mounted on top and bottom of truss

One triangular plate (***Figure 2-24***) is directly fitted on the Pan axis, under the VIP Dual Tripod. This plate is designed to engage with the EZ-Clamp hook.

One removable safety ring is also integrated with the bottom of the base to allow the projector to be secured with a safety cable (***Figure 2-25***).

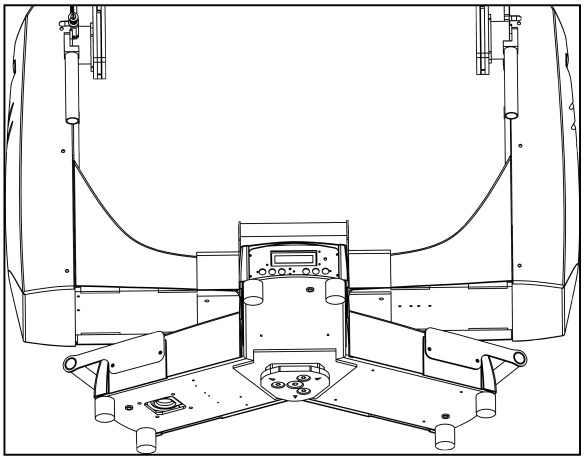

Figure 2-24 Triangular plate

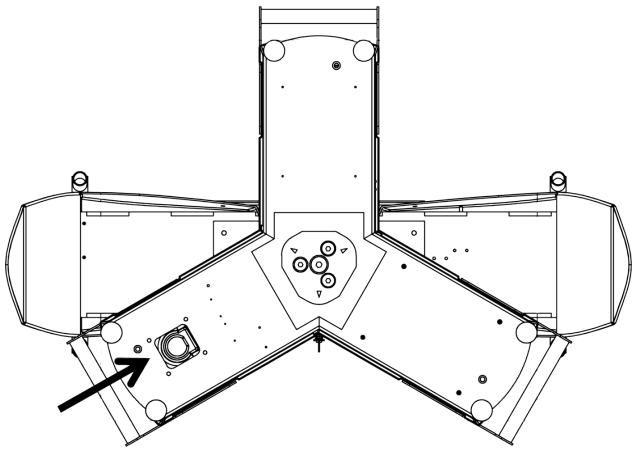

Figure 2-25 Base safety ring

2.4.2 Lifting Features

An inbox lifting ring is fitted on top of each arm. It allows the VIP Dual to be lifted for easy maintenance or for an installation away from its flight case.

I Lifting of the VIP Dual must only be performed by a trained professional.

I The VIP Dual tilts slightly when extracted from its flight case.

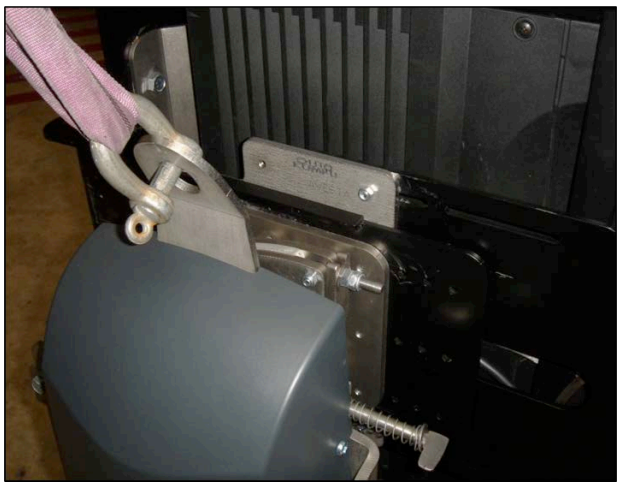

Weights

Verify your lifting equipment has an adequate weight rating to lift the yoke:

- VIP Dual / Roadster Series w/o lens: 200 kg (441 lbs)

3 Projector Installation

3.1 Roadster Series Lens Motor Replacement

To implement lens zoom and focus control from the DMX console, it will be necessary to replace the Roadster lens motors.

I Do not touch or remove any parts except those that are documented in the procedure. Malfunctions, electrical shock, fire hazard or other accidents may result.

NOTICE! *When moving or setting up a projector, ensure the lens cap is in place to prevent damage to the lens surface. Do not subject the lens to force and do not lift the projector by the lens. The actions can result in damage to the lens, cabinet or mechanical components.*

3.1.1 Lens Removal

1. Install the front lens cap. (***Figure 3-1***)
2. Press the lens button. (***Figure 3-1***)
3. Rotate the lens counter-clockwise until the tabs are free of the retaining ring (***Figure 3-2 A***). Pull lens out (***Figure 3-2 B***). Lens connectors will disconnect when the lens is pulled straight out.

NOTICE! *The connector slide assembly allows the connector to move as the lens is rotated.*

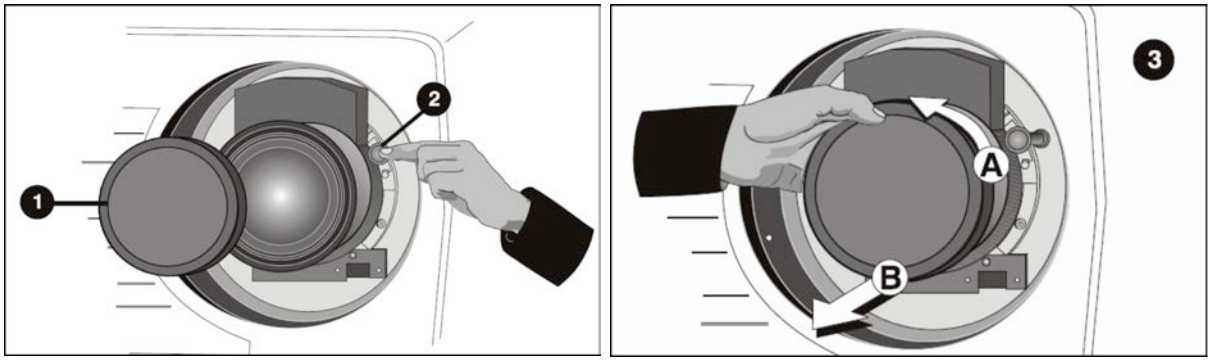

3.1.2 Lens Motor Set Replacement - Optional equipment

NOTICE! *All original screws must be set aside for re-use.*

1. Remove lens motor cover by removing screws shown in ***Figure 3-3***.
2. Remove the motor set from the lens by removing the screws in ***Figure 3-4***.

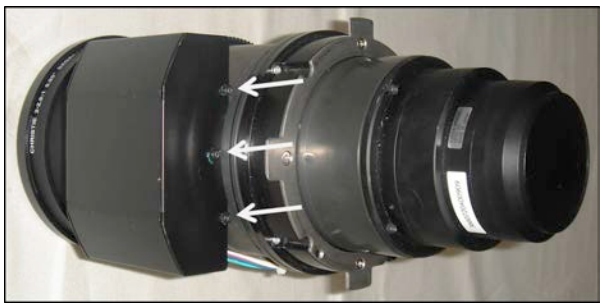

Figure 3-3 Motor cover removal

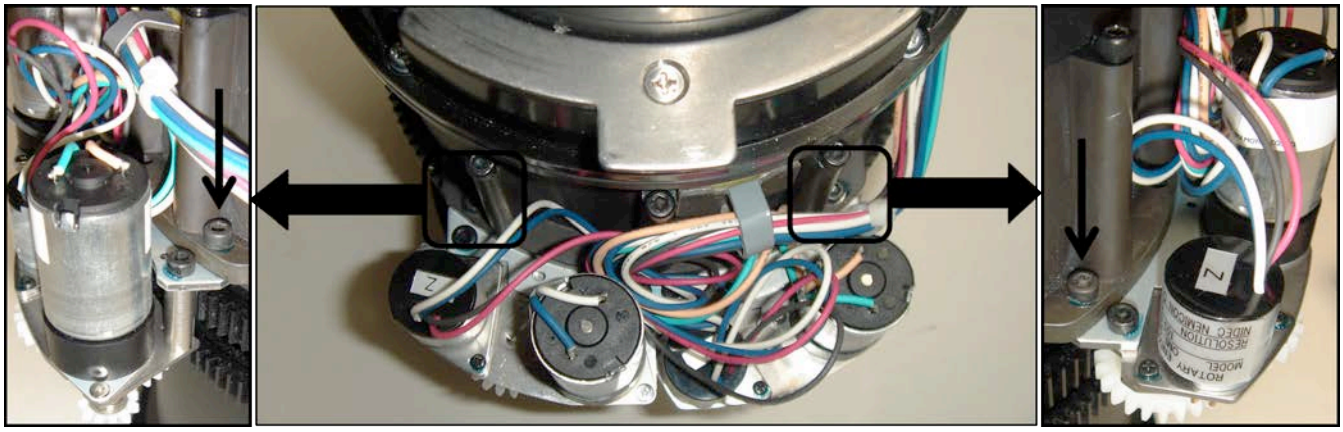

Figure 3-4 Motor cover removal

Figure 3-4 Motor set removal

3. Remove the connector bracket. (***Figure 3-5***)

Figure 3-5 Connector removal

4. Open the replacement motor set. (***Figure 3-7***)

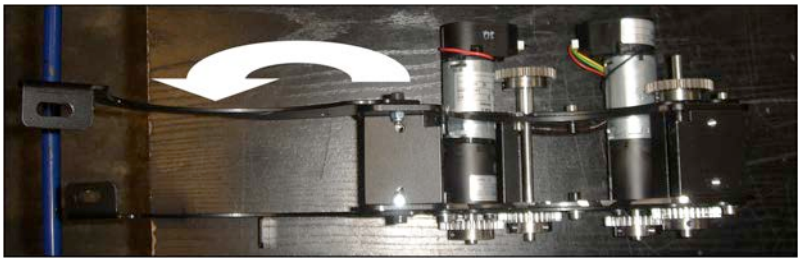

Figure 3-7 Open replacement motor set

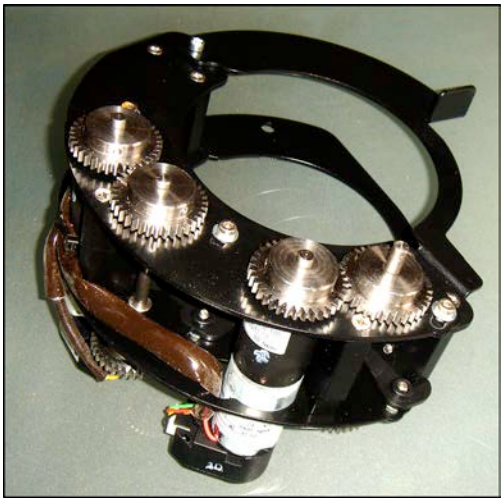

Figure 3-6 Replacement motor set

5. Loosen the screws at the locations shown in ***Figure 3-8*** to unlock the motor position adjustments.

Figure 3-8 Unlock motor adjustments

6. Place the lens in the motor set in the orientation shown in ***Figure 3-9***.

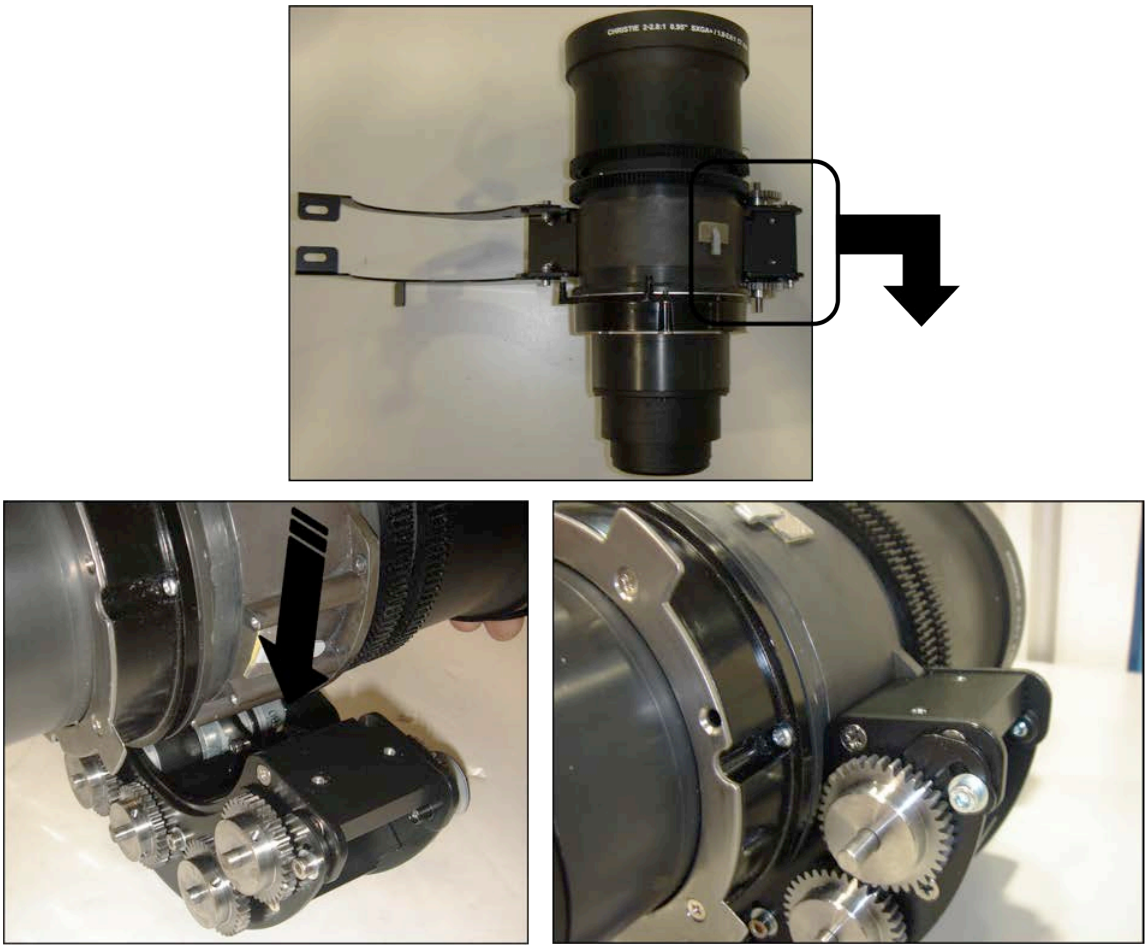

Figure 3-9 Place lens in motor set

7. Close the motor set arms and fasten them with the hardware shown In ***Figure 3-10***.

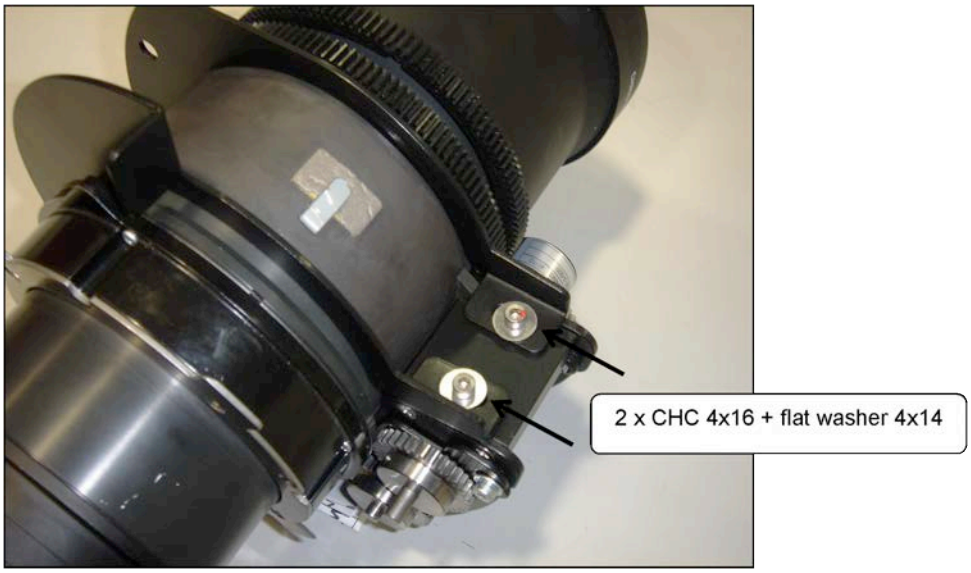

Figure 3-10 Fasten motor arms

8. Allow the motor gears to mesh with the lens gears. (***Figure 3-11***).

NOTICE! *DO NOT apply additional pressure on the gears in an effort to mesh them.*

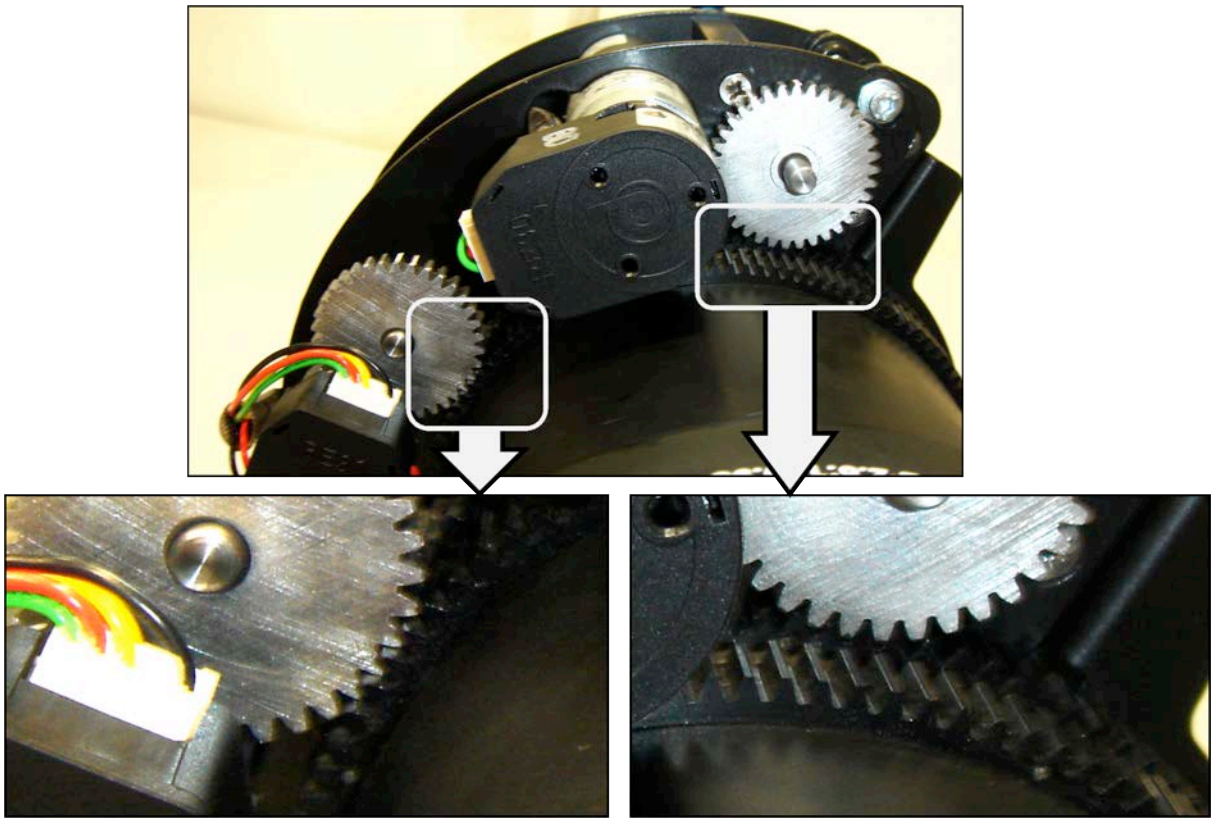

Figure 3-11 Engage gears

9. Inspect the motor gears to ensure they are meshed with the lens gears. Tighten the motor position adjustment screws loosened earlier
   (Refer back to ***Figure 3-8***).

10. Carefully rotate the lens gears and verify that the motor gears are rotating. If gear operation is satisfactory, the lens is ready for installation.

Figure 3-12 Lens with replacement motors

3.2 Roadster Series Bracket

3.2.1 Bracket Description

The Roadster Series projector is mounted on a unique video head, or bracket. The bracket includes two triangular plates that form part of a Quick Lock system (***Figure 3-13***), which allows the projector to be quickly mounted on or dismounted from the VIP Dual.

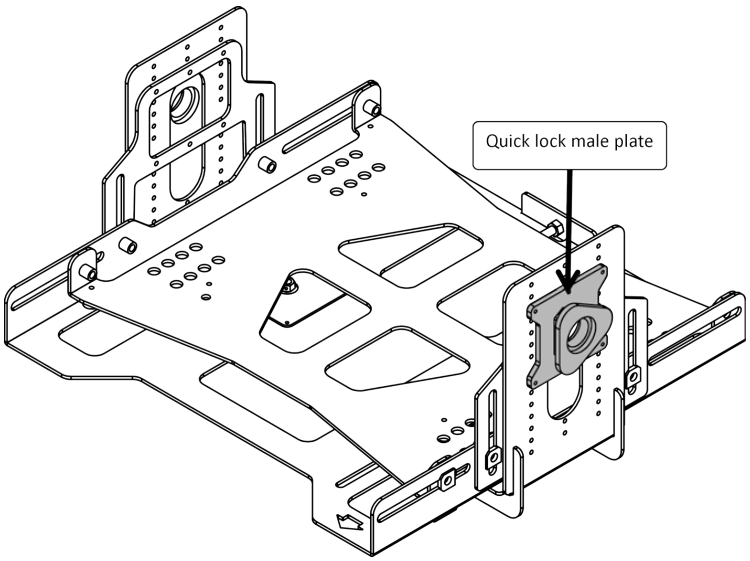

Figure 3-13 Bracket with quick lock plate

Quick Lock System - Optional equipment

This system is comprised of triangular plates on the projector bracket that mate with a slots on the VIP Dual tilt mechanism (***Figure 3-14***). They are secured with a latch that fastens with (2) nuts, (3) blocking bolts and (1) safety bolt. With only a few steps, the user can quickly change out projectors that have been pre-mounted onto brackets.

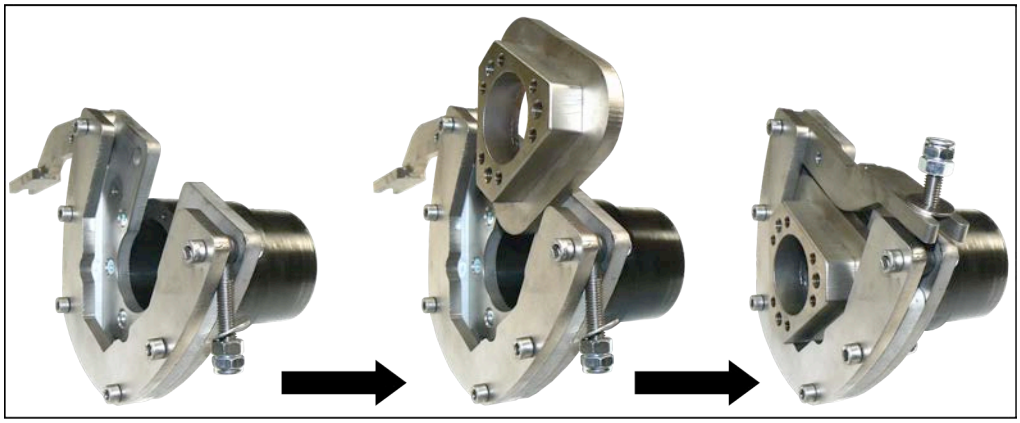

Figure 3-14 Quick Lock System

3.2.2 Bracket Setup

All servicing must be performed by Cinemeccanica accredited service technicians. Use replacement parts that are manufacturer-approved only. Use of any other part other than the ones specified by the manufacturer can result in fire, electric shock or risk of personal injury and irreparable equipment damage.

Removing the Bracket from the VIP Dual

On occasion, it may be necessary to remove the bracket from the VIP Dual. Perform the following steps on both sides of the bracket:

1. Lock the tilt axis, then loosen (2) M8 latch nuts (***Figure 3-15***).
2. Back off the (3) TH 6x16 blocking bolts (***Figure 3-16***).

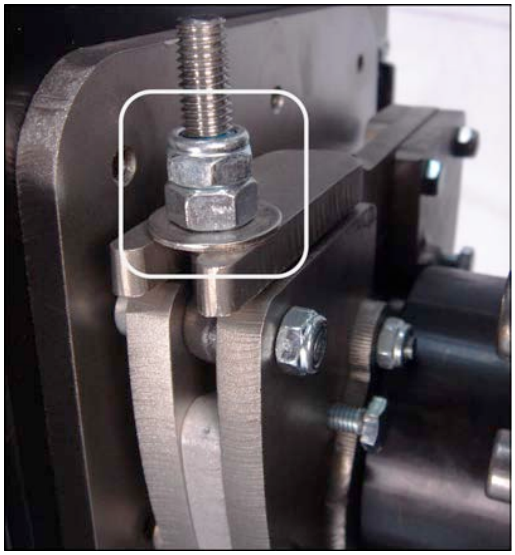

Figure 3-15 Undo 2 Latch nuts

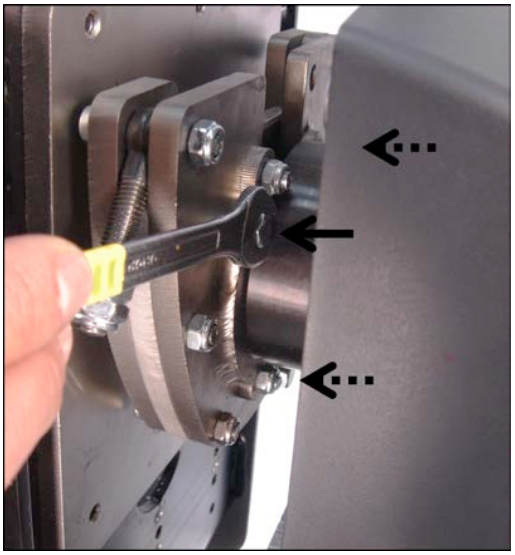

Figure 3-16 Undo 3 blocking bolts

3. Back off the safety bolt (***Figure 3-17***).
4. Open the latch (***Figure 3-18***).

5. Remove the yoke arm cover (6 screws) and pull the cables through the tilt axis opening (***Figure 3-19***).

6. Lift the bracket from the VIP Dual.

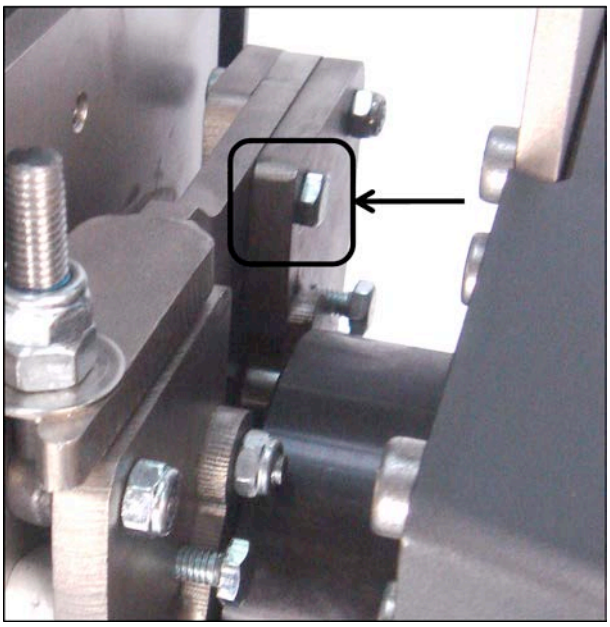

Figure 3-17 Undo safety bolts

Figure 3-18 Open latch

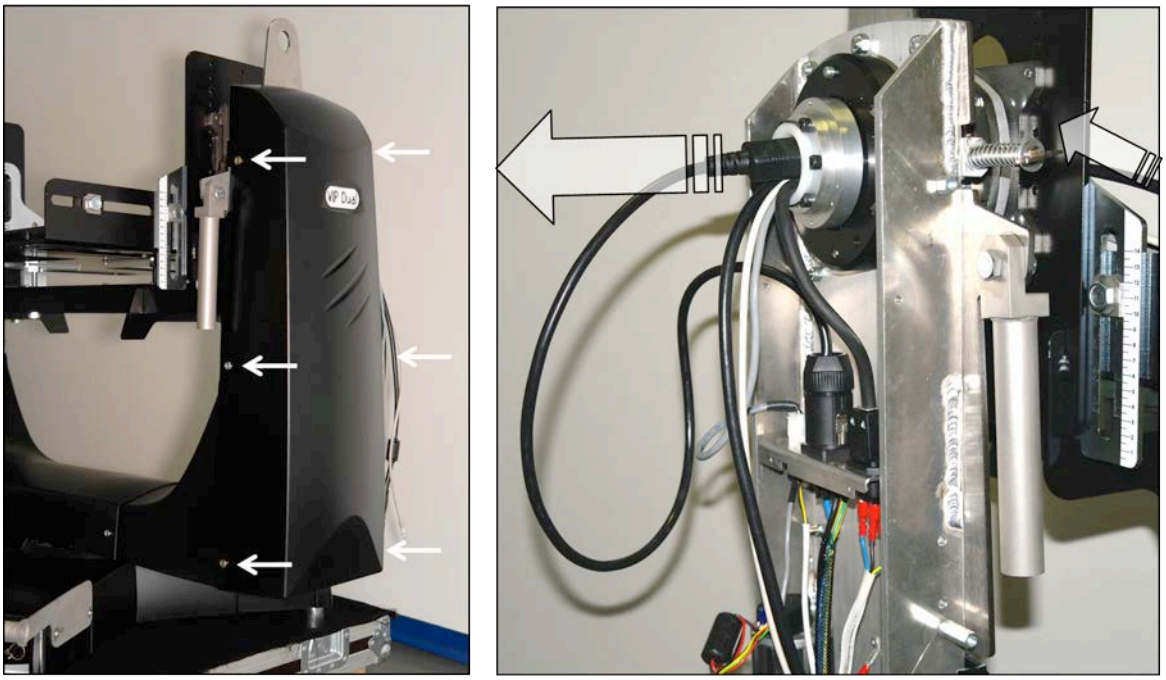

Figure 3-19 Remove covers and extract cables through tilt mechanism

Installing the Bracket on the VIP dual

NOTICE! *Perform the following steps on both sides of the yoke.*

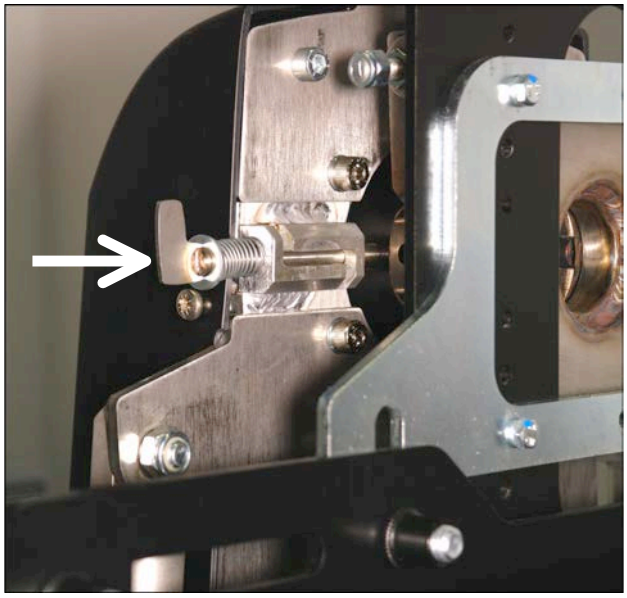

Figure 3-20 Lock tilt mechanism

1. Ensure the tilt mechanism is locked.

2. Rotate the bracket until the arrow on the bracket (circled in ***Figure 3-21***) points upward and slide the Quick Lock plates into the yoke. The arrow on the bracket also indicates where the lens end of the projector will be located.

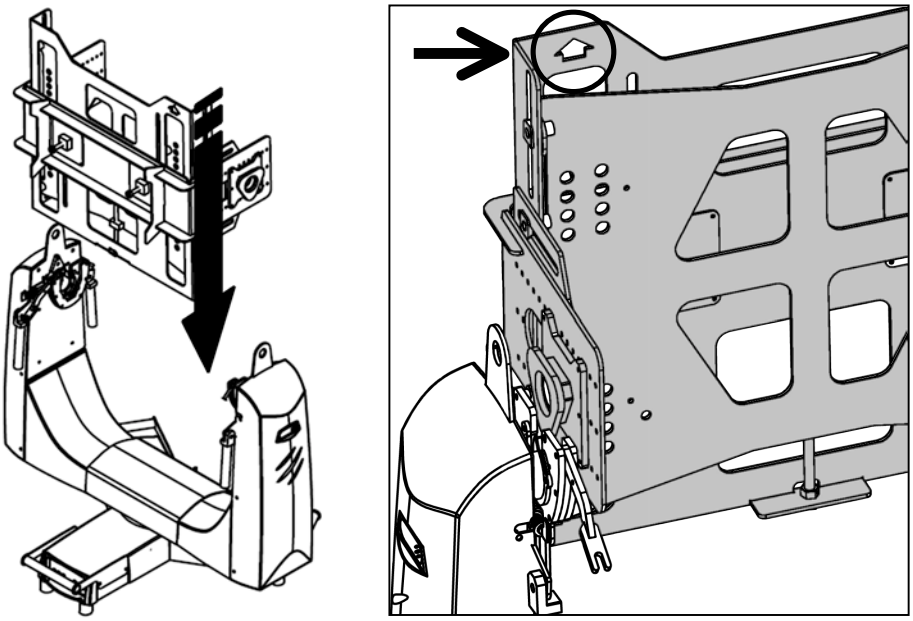

Figure 3-21 Mount bracket onto yoke

NOTICE! *There are 2 ways that the bracket can be oriented when mounting onto the yoke. The correct orientation is with the right side of the projector (as viewed from lens end) closest to yoke Arm#1, which contains the sub connection panel. The upward arrow on the bracket also indicates the correct orientation.*

3. Close the latch. (***Figure 3-22***)

4. Tighten the safety bolt. (***Figure 3-23***)

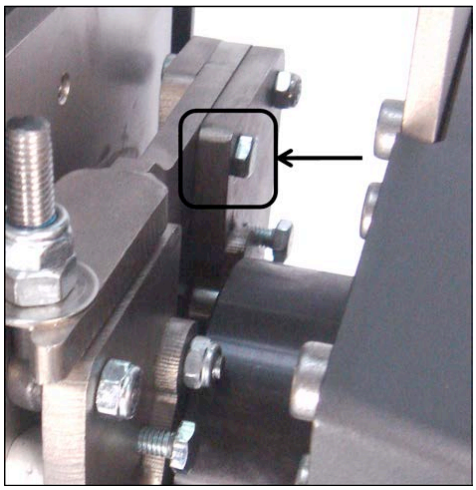

Figure 3-23 Tighten safety bolt

Figure 3-22 Close latch

5. Tighten (3) blocking bolts. (***Figure 3-24***)

6. Tighten (2) latch nuts. (***Figure 3-25***)

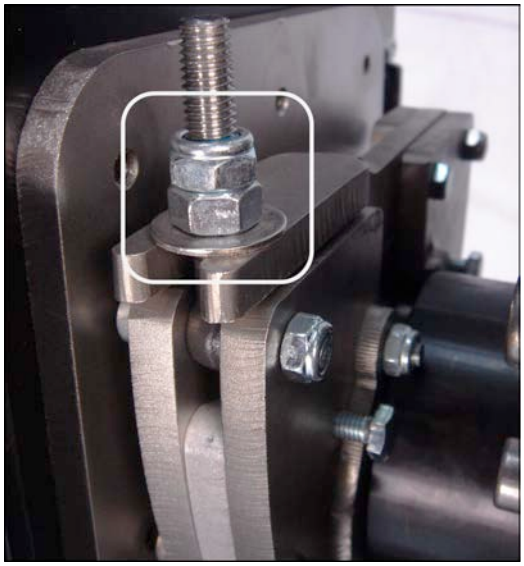

Figure 3-25 Tighten latch nuts

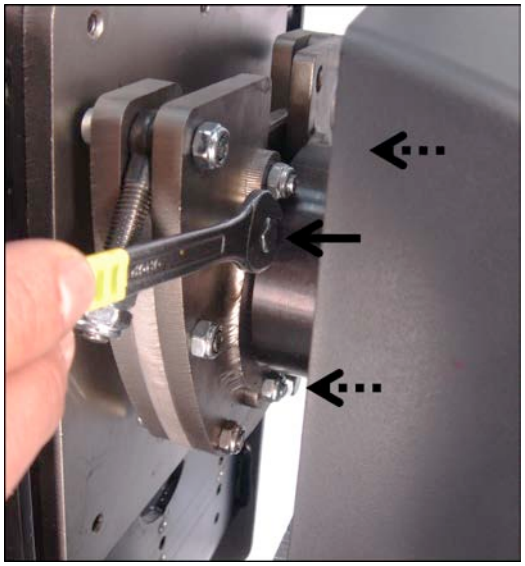

Figure 3-24 tighten blocking bolts

7. Refer back to ***Figure 3-19***. With the vertical cover removed, thread the DMX and power cables through the tilt axis.

8. Unlock the tilt mechanism, rotate the bracket until it is horizontal and lock the tilt mechanism again.

3.2.3 Installing the Roadster Series Projector on the Bracket

The bracket assembly includes an adjustable plate which allows the projector position on the bracket to be adjusted for optimum balance. The projector is mounted to this plate with (2) adaptor plates.

Before mounting the projector on the bracket, the vertical position of the adjustable plate must be set for the Roadster.

1. Ensure that the (6) screws are located starting at the third set of holes from the top (bottom illustrations in ***Figure 3-26***).

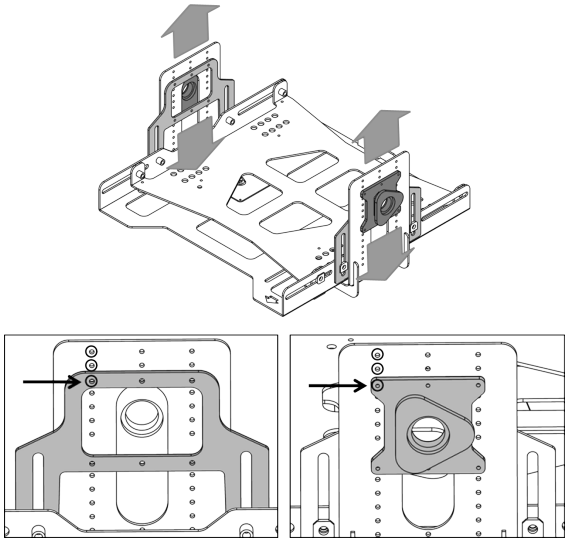

Figure 3-26 Vertical height adjustment roadster

2. Attach the Roadster adaptor plates to the bottom of the projector (***Figure 3-27***) in the orientation shown using (4) TH 12x25 screws and (4) 12mm split lock washers. Note that the notch on each adaptor plate must align with the screw heads as shown at bottom right. Slide the plates then fasten the M12 screws once the plates are aligned.

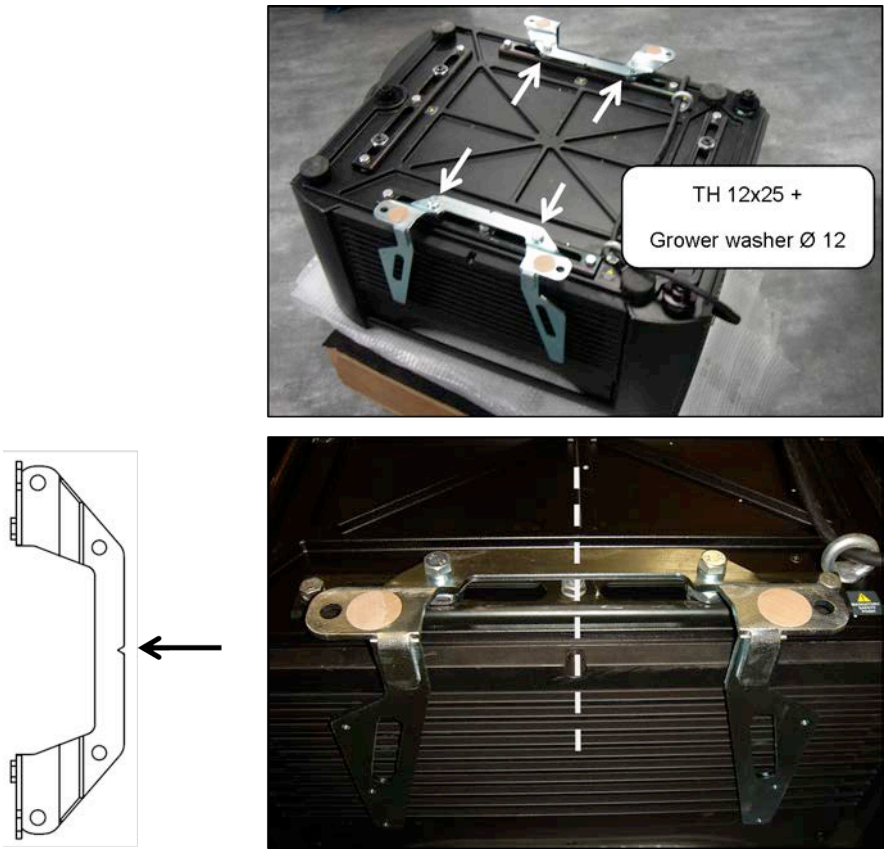

Figure 3-27 Attach the adaptors to the projector

3. Turn the projector upright, and place it on the bracket. Note that the front (2) adaptor plate holes shown in ***Figure 3-28*** must align with the second set of holes (shown in red) from the front of the bracket. (Front is indicated by the arrow in the blue box in ***Figure 3-28***).

4. Fasten at (4) locations (***Figure 3-30***) using a TH12x30 screw, (2) 12x27 flat washers and (1) M12 Nylstop at each location.

NOTICE: *Balance adjustment depends on the lens used, and is not performed at this point.*

I Ensure that the tilt mechanism is locked before mounting projector.

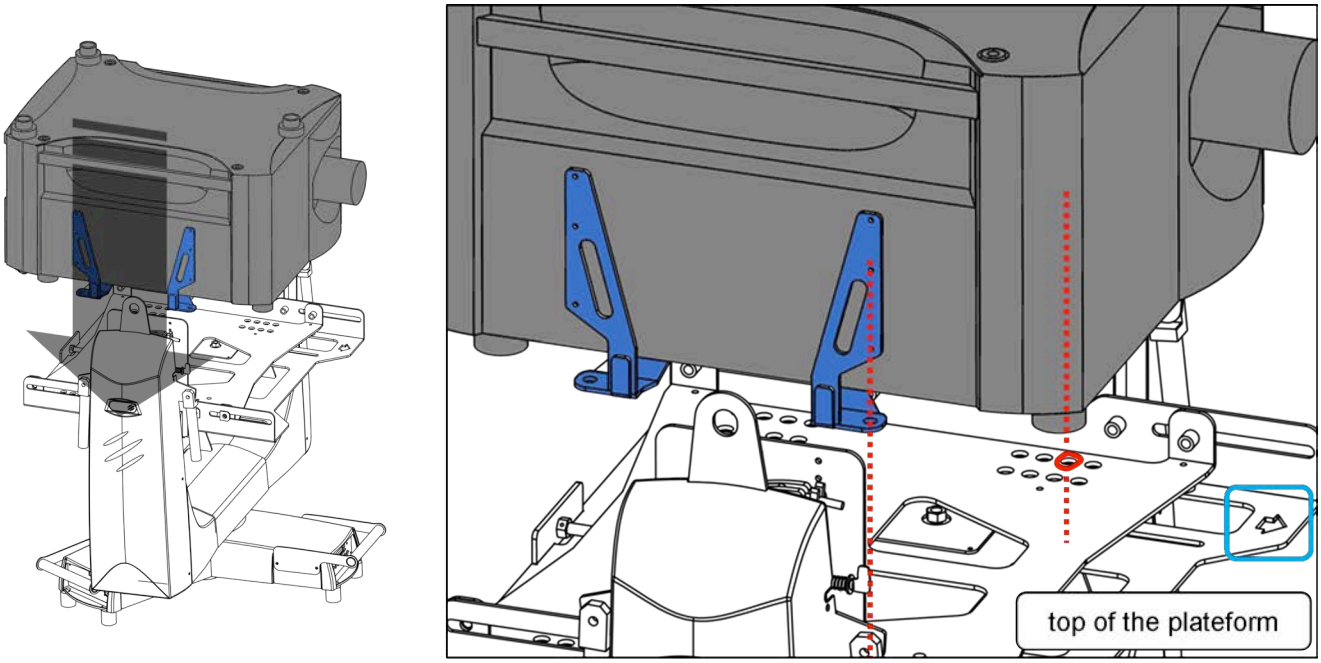

Figure 3-28 Place projector on bracket

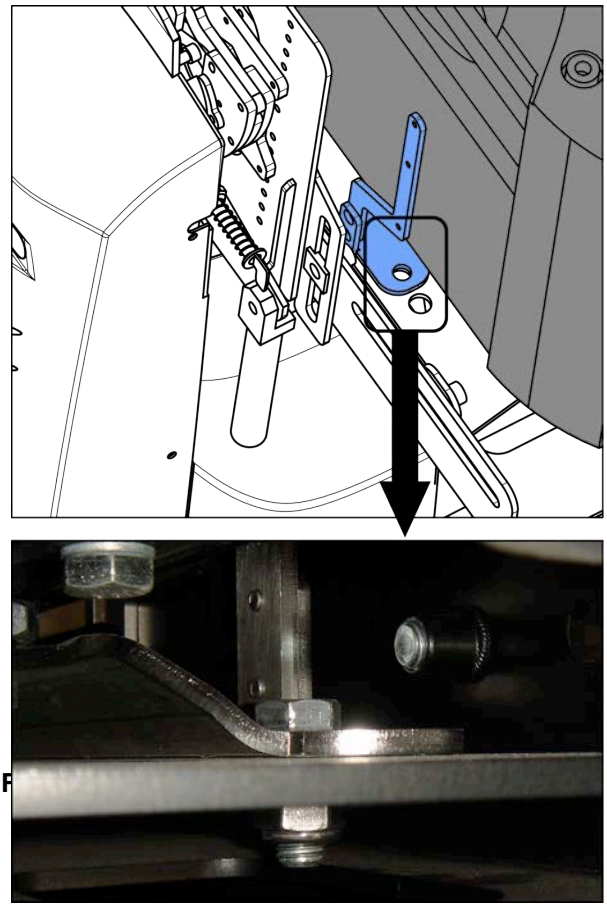

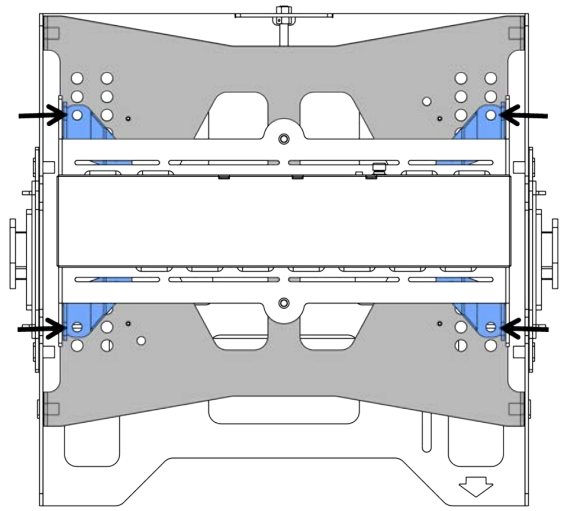

Figure 3-30 Fastener details and location with bracket holes

5. Install the Head Box as shown in ***Figure 3-31*** using (2) TH 6x16 screws, (1) 6x18 flat washer and (1) split lockwasher on each side.

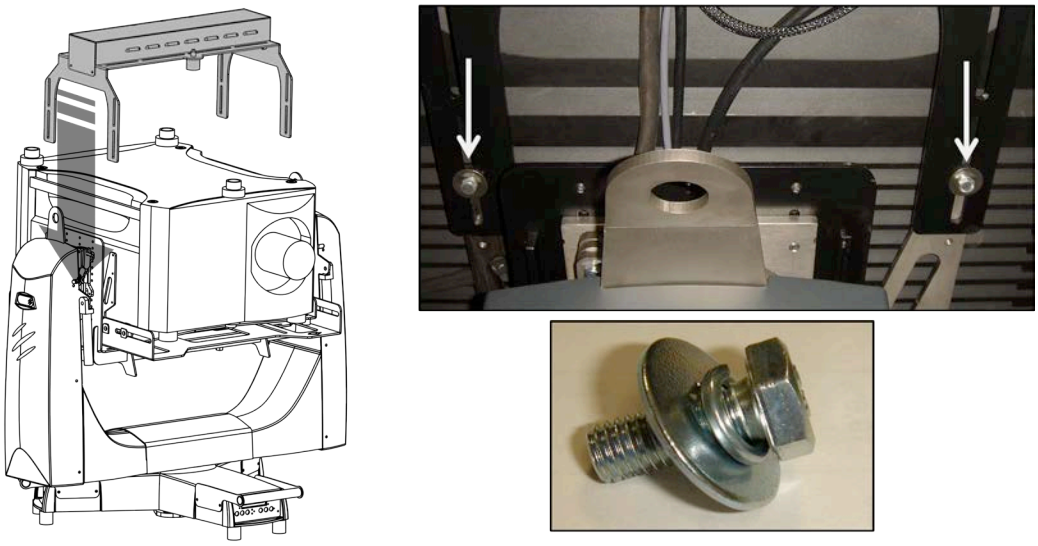

Figure 3-31 Fasten head box to bracket

3.2.4 Lens Installation

1. Connect the lens connector to the external zoom and focus cable from the Head Box. (***Figure 3-32***).

NOTICE! *Before lens installation, remove rear lens cap.*

2. Align the tabs on the lens with the slots in the lens retainer ring on the projector. Push the lens in until the tabs touch the back of the retainer ring. (***Figure 3-33***)

Figure 3-33 Install lens

3. To ensure the lens is secured in the lens mount, turn it clockwise until you feel the tabs on the lens butting against the end stops on the lens mount retaining ring (***Figure 3-34***). To ensure the locking pin is properly engaged, turn the lens counter-clockwise. If the lens rotates, the locking pin is not properly engaged. Turn the lens clockwise and pull the lens plunger assembly out until the plunger assembly stops.

4. Recheck by turning the lens counter-clockwise. The lens should not rotate.

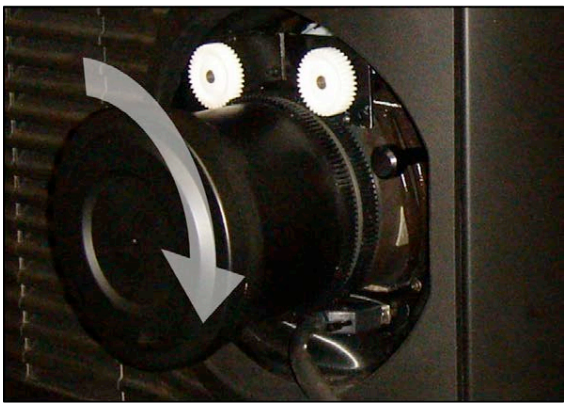

Figure 3-34 Lock lens by turning clockwise

3.2.5 Balancing the Roadster Series Projector

Depending upon the choice of lens used on the Roadster, the balance adjustment will vary. Balancing is achieved by adjusting the bracket in both the horizontal and vertical directions. (***Figure 3-35***)

NOTICE! *Ensure the lens is installed before proceeding.*

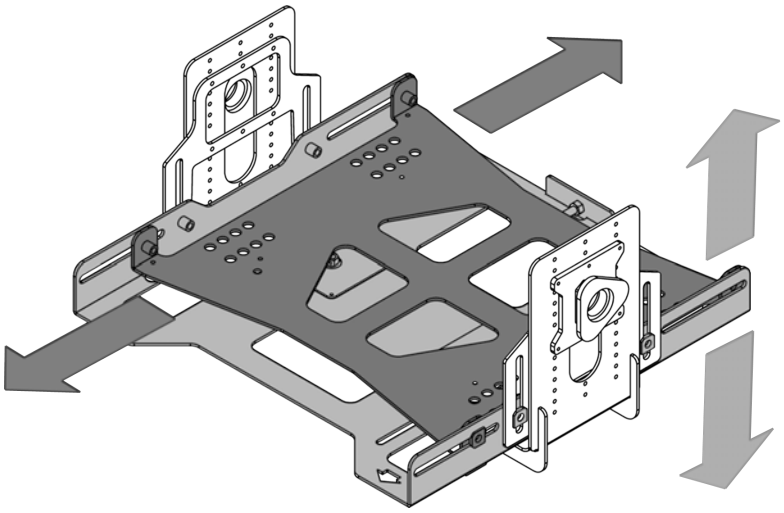

Figure 3-35 Bracket balance axes

Adjustments are made with 2 screws for the vertical axis and 1 screw for the horizontal axis.

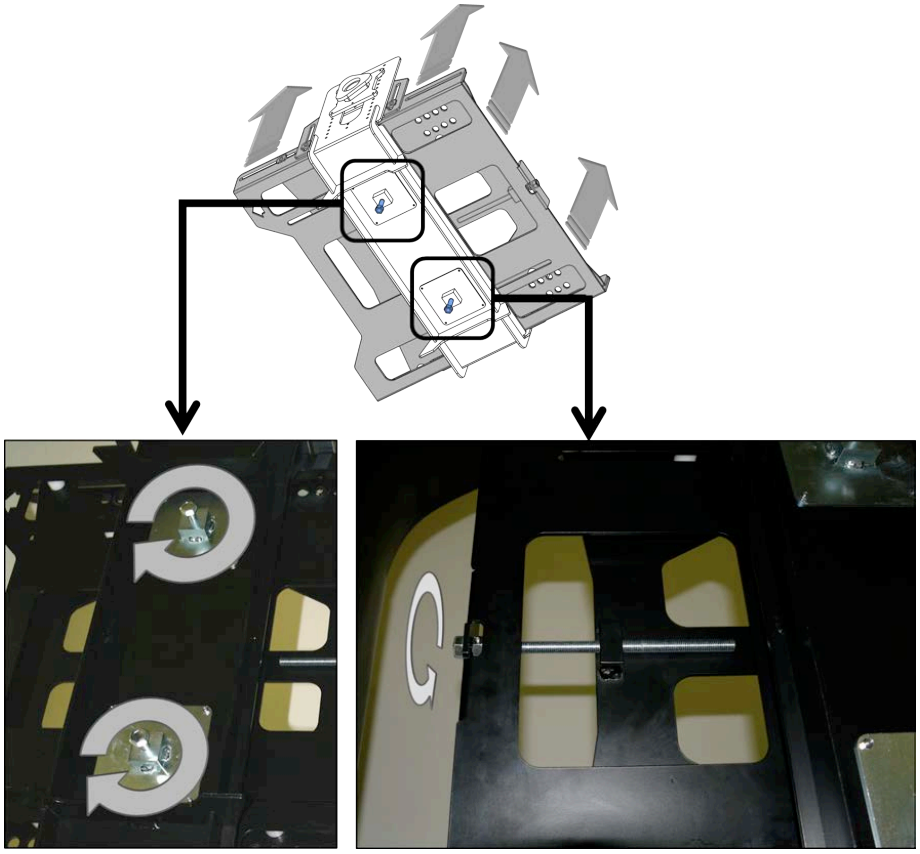

Figure 3-36 Bracket vertical and horizontal adjustment screws

When adjusting the bracket height, use the scales to ensure all bolts are set to the same value.

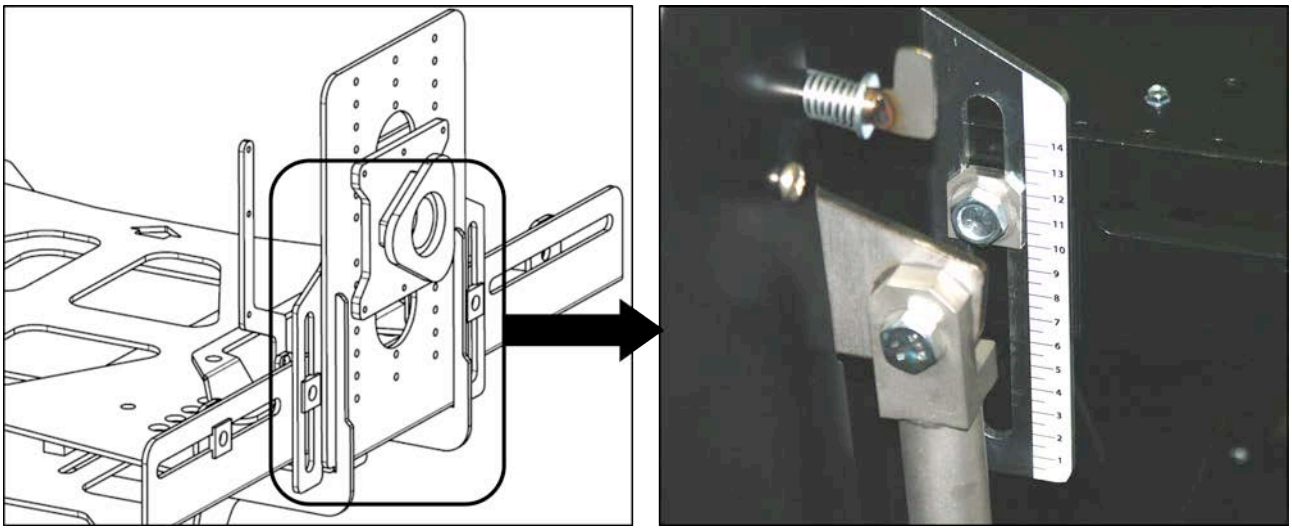

Figure 3-37 Vertical adjustment scales

NOTICE! *With the VIP Dual power turned off and the tilt axis unlocked, balance is only achieved when the projector does not tilt on its own when set to tilt angles of 0°, 45° and 90°. As a result, it may be necessary to perform the balance adjustment more than once until this is achieved.*

When all balance adjustments have been completed, lock all 8 blocking screws. (***Figure 3-38***)

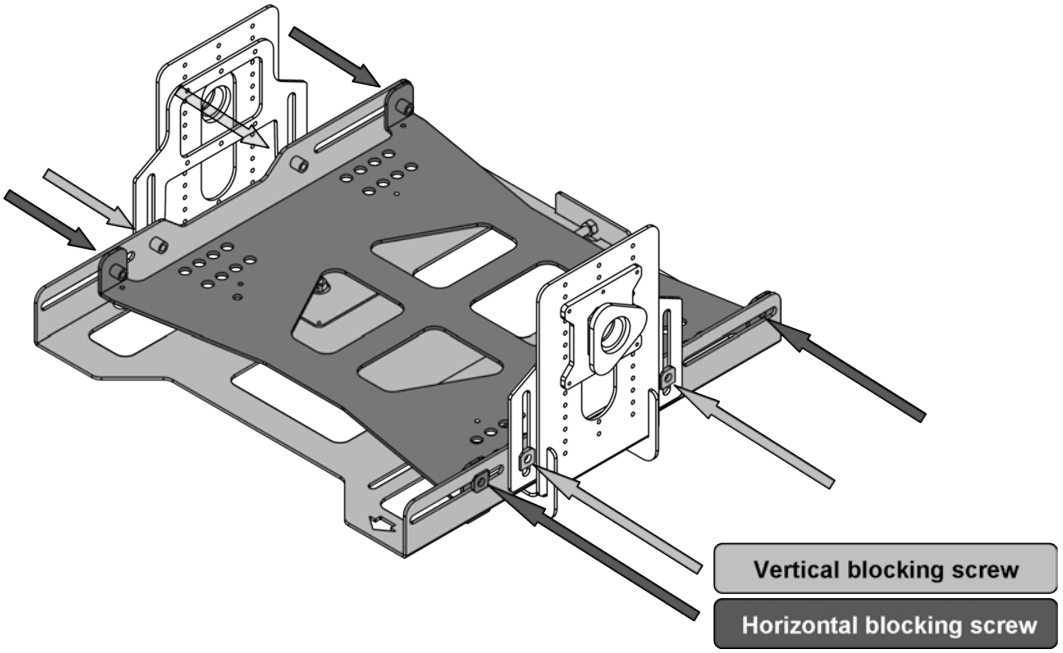

Figure 3-38 Balance blocking screws

3.2.6 Making Electrical Connections

All servicing must be performed by Cinemeccanica accredited service technicians. Use

replacement parts that are manufacturer-approved only. Use of any other part other than the ones specified by the manufacturer can result in fire, electric shock or risk of personal injury and irreparable equipment damage.

1. Remove the yoke arm cover on Arm #1, which contains the sub connection panel (6 screws). See ***Figure 3-39***.

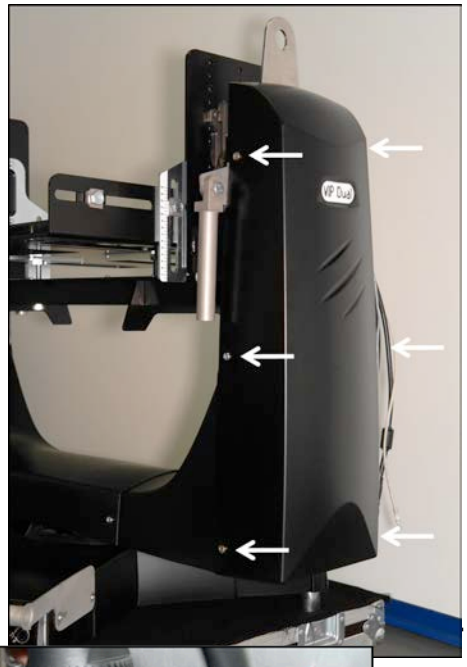

2. Connect the Roadster AC cable to the sub connection panel as shown in ***Figure 3-40***.

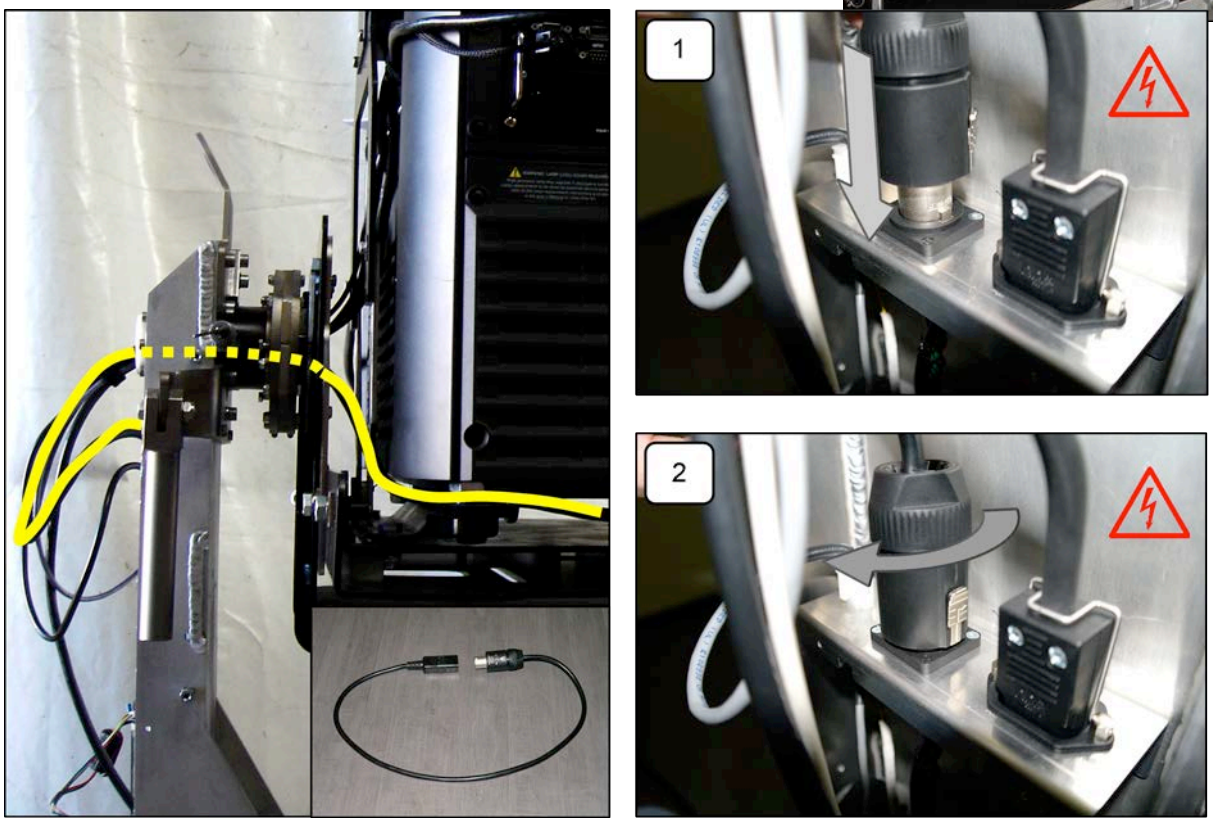

Figure 3-40 Roadster AC connection to yoke

3. Attach the DMX Data In cable and the Power Supply cable to the sub connection panel (circled in ***Figure 3-41***).

4. Route the Power In and DMX Data In cables to the Head Box as shown in ***Figure 3-42***. Make connections to the Head Box (***Figure 3-43***). The Power In connector must be locked by

turning the shell clockwise.

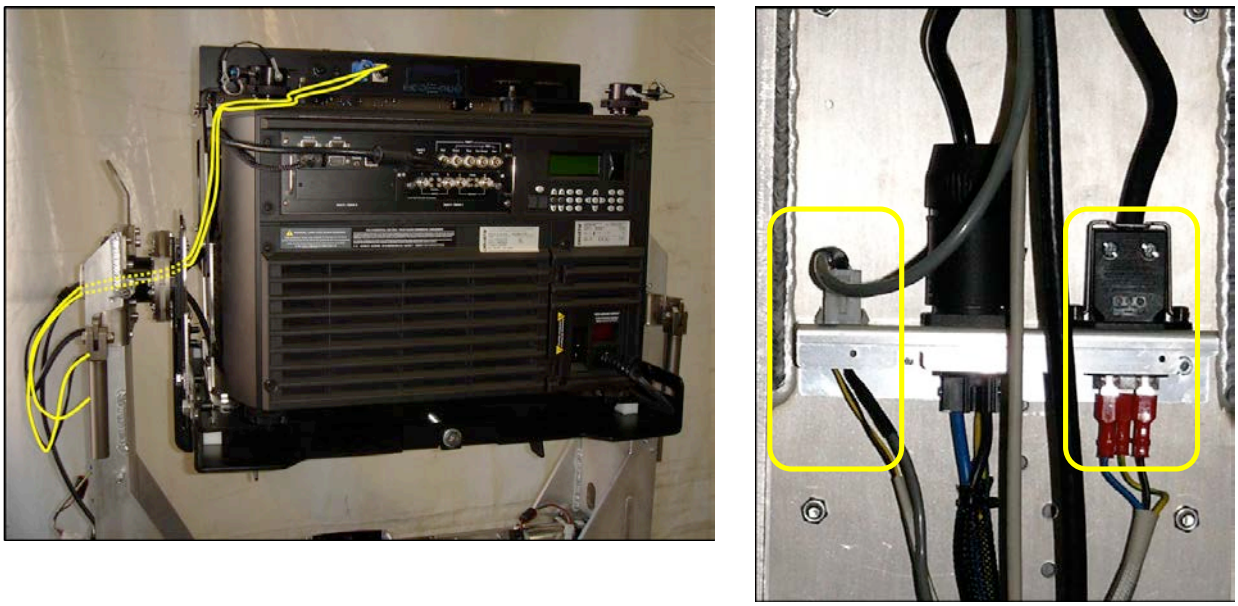

Figure 3-42 Head box yoke routing

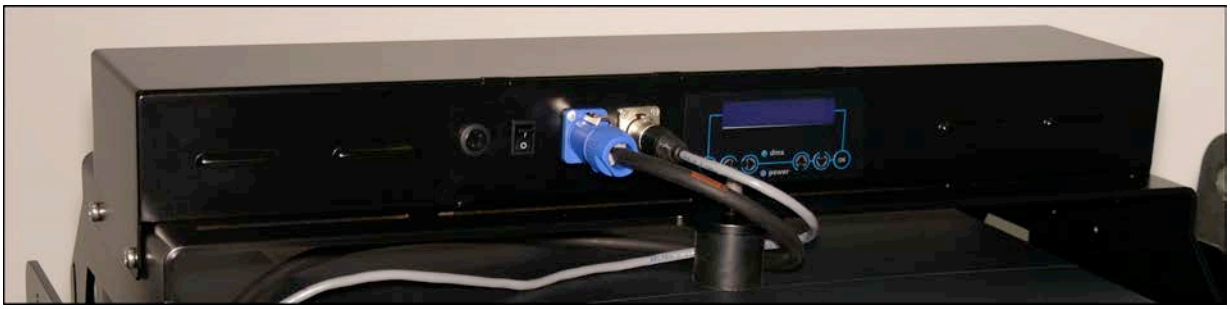

Figure 3-43 Head box connections

5. Make the RS232 and DVI connections as shown in ***Figure 3-44***. Ensure that the RS232 cable is plugged into the **RS232 OUT** connector.

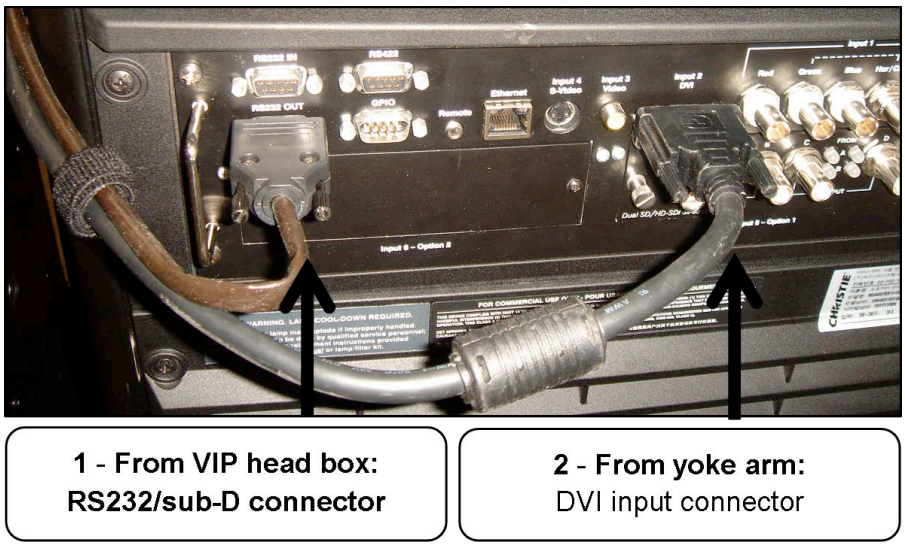

Figure 3-44 Roadster projector connections

3.3 VIP Dual Head Box / Roadsters Series settings

3.3.1 Description

The VIP Dual head box (***Figure 3-45 & Figure 3-46***) allows to drive Roadster Series features via DMX protocol:

- Roadster‘s video functions
- Zoom/Focus motor set

Figure 3-45 VIP Dual Head Box – fitted with RS232 and Zoom/Focus cable

1 – Fuse holder (T750mA)
2 – Power switch
3 – AC Powercon connector (power supply)
4 – DMX input
5 – Display and control panel

Figure 3-46 VIP Dual Head box panel

3.3.2 RS232/DMX interface board

VIP Dual head box houses the DMX/RS232 board which interface protocols for driving video projector’s functions with the VIP Dual DMX protocol.
Channel #7 of the DMX protocol includes all these video functions.
*See **Table 4-2**, on **page 4-22.***

By removing the head boxer cover you can access to the DMX/RS232 board and all the Head box components ***(Figure 3-47***)

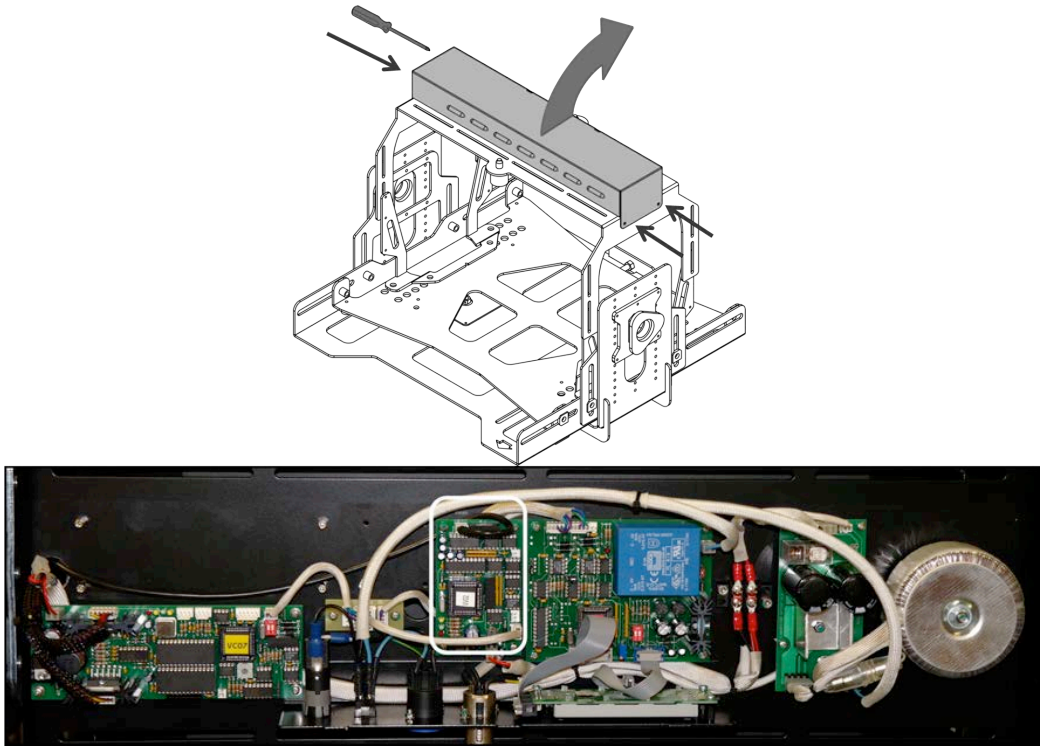

Figure 3-47 Head box cover removal and RS232/DMX board location

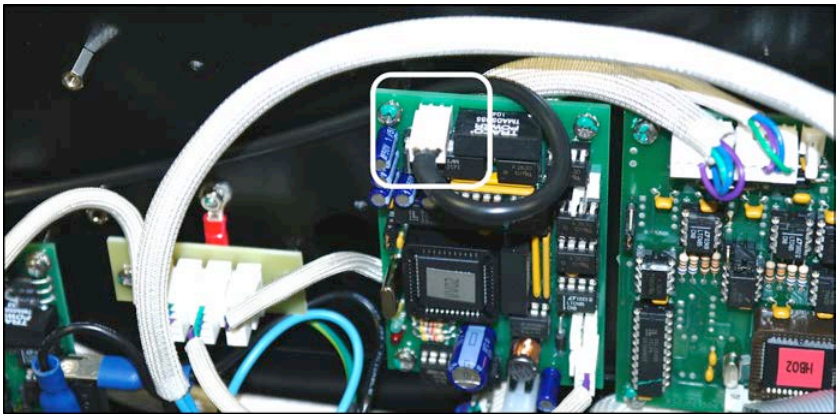

The RS232 cable, plugged on the Roadster Series external side terminal, is connected to the Rs232 outup of this board (***Figure 3-49***).

Figure 3-49 RS232 external cable linked to the Roadster Series's rear connection panel

A little strap installed on this board (***Figure 3-50***) enable the RS232 configuration :
STRAP OFF define the Roadster Series video function control.

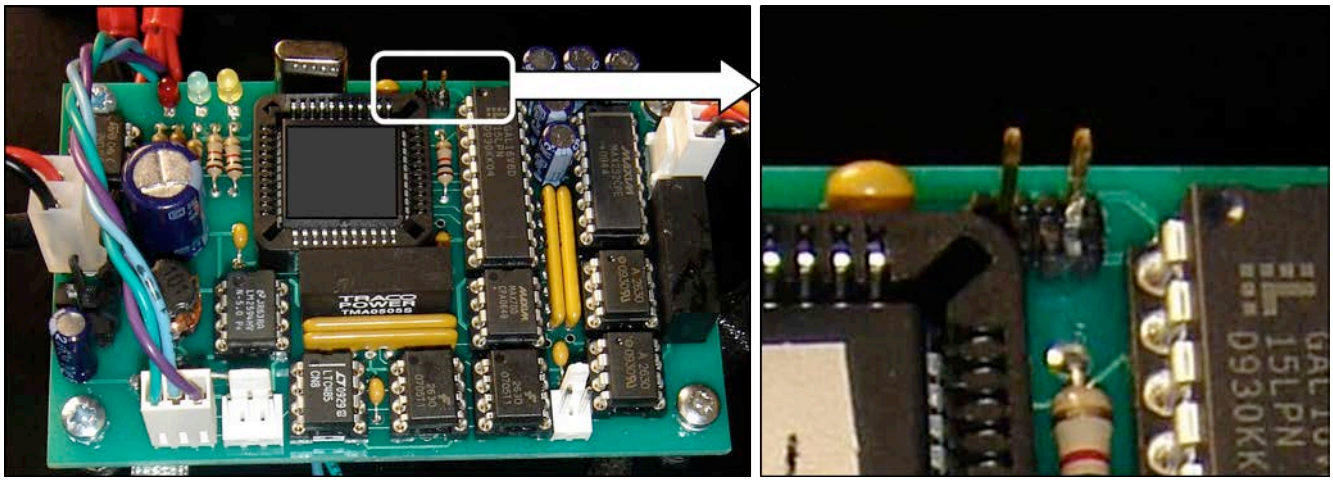

Figure 3-50 RS232/DMX board- strap location / STRAP OFF= Roadster Serie configuration

I CHRISTIE Roadster series preliminary setting : the internal "communication parameter" must be set at 19200 bauds. (please refer to CHRISTIE Roadster user guide).

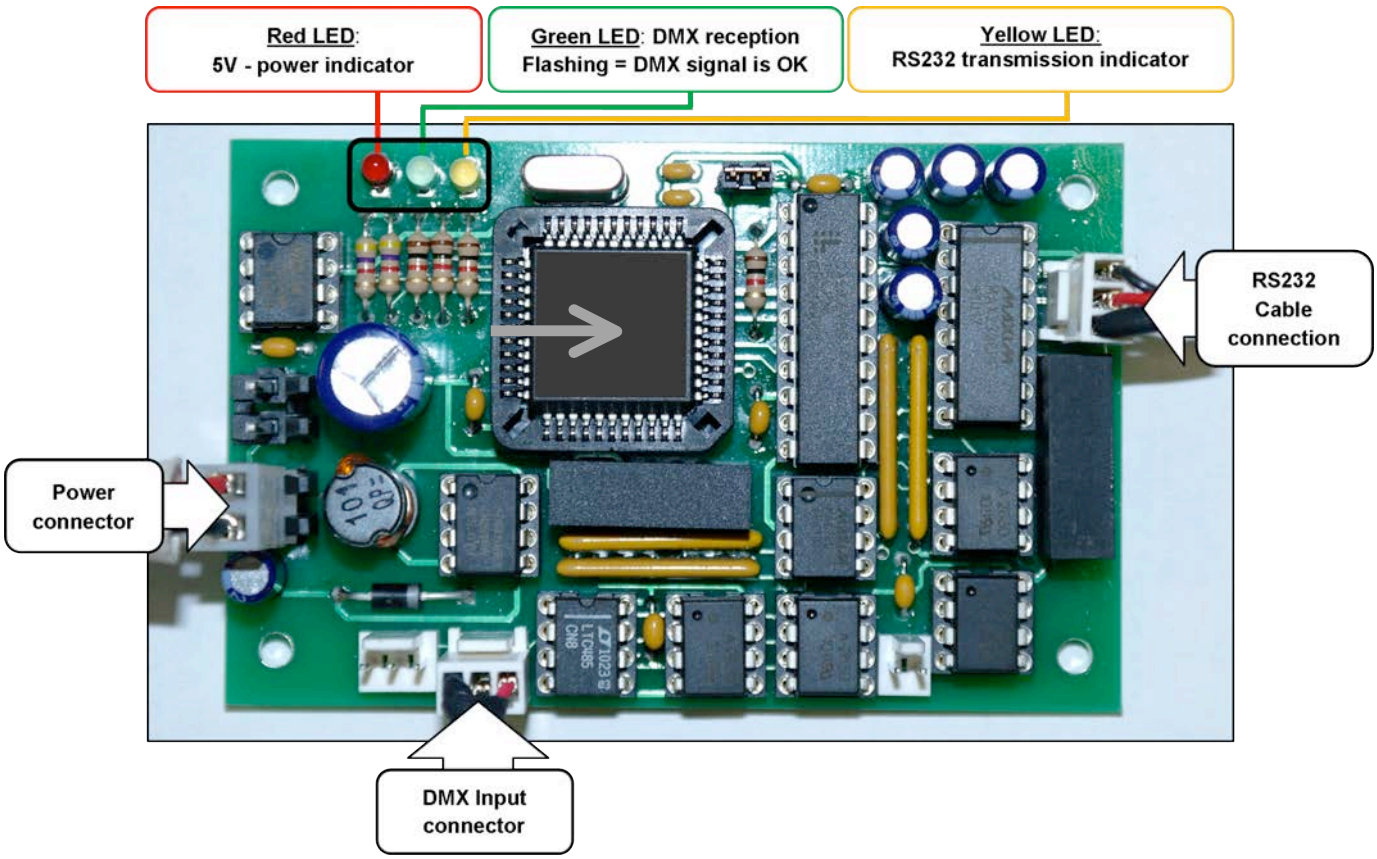

Figure 3-51 DMX-RS232 board features

All the video functions of the video projector are managed by the microchip located on the RS232/DMX interface board.

3.3.3 Zoom/Focus board

The zoom/focus board, highlighted in ***Figure 3-46***, interfaces Roadsters Series zoom/focus motor set with the VIP One DMX protocol.
DMX channel #8 controle zoom and DMX channel #9 controle focus
*See **Table 4-2**, on **page 4-22.***

A specific chip (provided) has to be installed on the zoom/focus board for driving th LX1500's lenses module :

Figure 3-52 Zoom/Focus board location

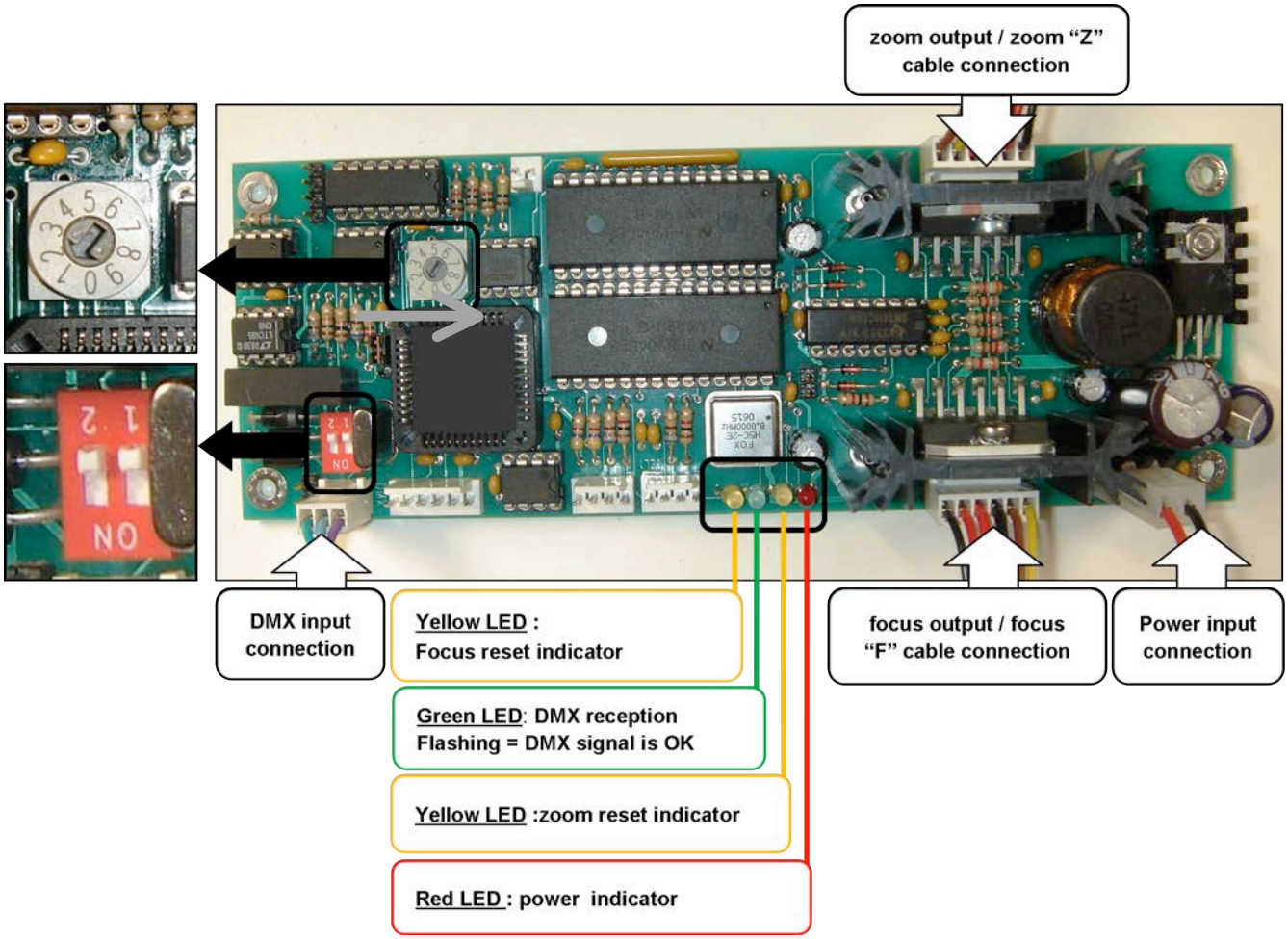

Figure 3-53 Zoom/Focus board features

4. VIP Dual yoke - Pan and Tilt movements

4.1 Description

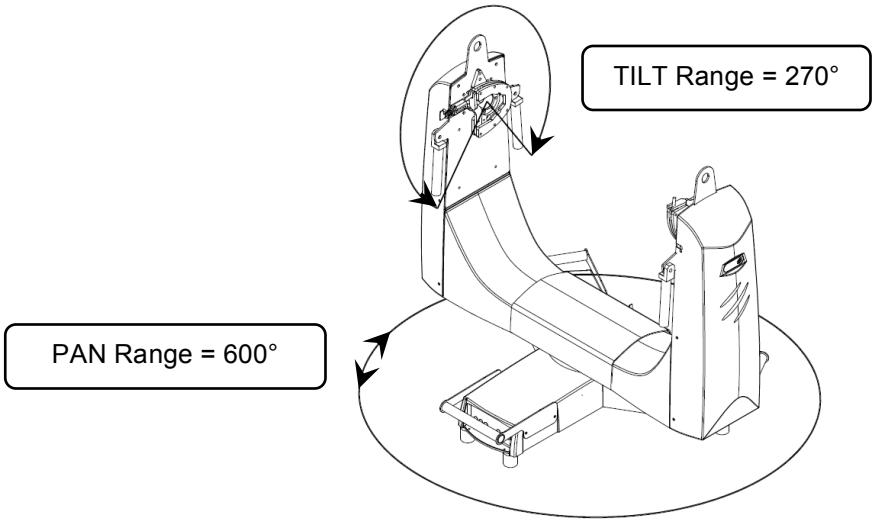

You should stay at bay when switching on the projector and whenever those movements are made full speed (memory play back).

NOTE: The electronic mother board (called CPU) automatically shut down motor powering when those movements are encountering any kind of physical resistance. This automatic safety procedure can only be overcome by sending a new command from the DMX control console.

4.2 Pan/Tilt locking system

Important: locking processes should begin only when the projector is switched off. The Tilt locking systems should always be unlocked when switching on the projector in order to allow the projector to reset.
Tilt axis has two locking positions.

NOTE: Before switching on the projector, a check has to be made to verify the two locking bars are on the unlocked position.

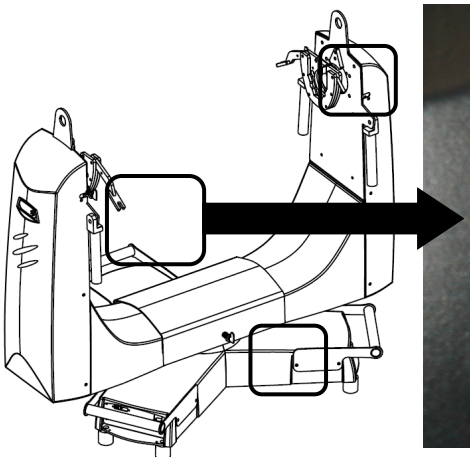

2x Tilt Lock / 1x Pan Lock

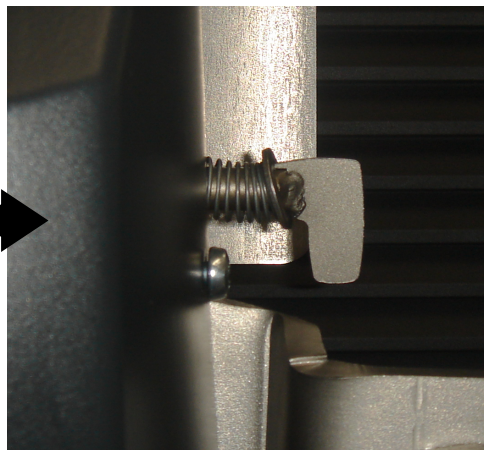

Locked position

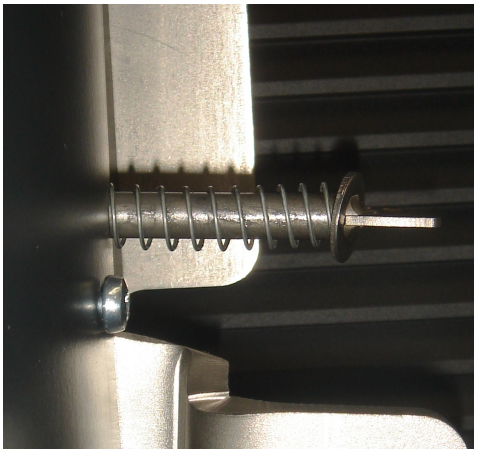

Unlocked position

Tilt axis can be locked in order to facilitate handling handling or any maintenance action.

5 Maintenance

Installers, service trained operators and all other users must maintain a safe operating environment at all times. Read through this section in its entirety and understand all warnings and precautions before attempting to operate the VIP Dual system.

5.1 Safety Warnings and Guidelines

5.1.1 General Precautions

I All servicing must be performed by Cinemeccanica accredited service technicians. Use replacement parts that are manufacturer-approved only. Use of any other part other than the ones specified by the manufacturer can result in fire, electric shock or risk of personal injury and irreparable equipment damage.

I For protection from electric shock, the VIP Dual must be grounded (earthed) to protect against electrical shock and the AC power distribution circuit must be equipped with a fuse or circuit breaker and ground-fault (earth-fault) protection.

I Disconnect the VIP Dual from AC power before removing any cover or part – including fuses – and when not in use. Covers shall only be removed by Cinemeccanica accredited service technicians.

I Isolate the VIP Dual from power immediately if any power connector, power cable, seal, cover or other component is damaged, defective, deformed, wet or showing signs of overheating. Do not reconnect power until repairs have been completed.

I Do not expose the VIP Dual to rain or moisture.

This symbol appears in this manual for procedures where a Pinching or Crushing hazard between chain and sprocket exists. Keep hands clear when unit is powered. Disconnect power before servicing.

This symbol appears in this manual for procedures where a Pinching or Crushing hazard between rotating and stationary surfaces exists. Keep hands clear when unit is powered. Disconnect power before servicing or apply rotation locks.

5.2 Pre-Operational Checklist

Before you operate the VIP Dual, check these items:

- Verify that the power cable connector is locked to the yoke base.
- Verify that the green LED is flashing on the control panel. This indicates that the yoke is receiving a DMX signal.
- Verify that the connection between the projector and the yoke is correct.
- Verify that the yoke and projector can move freely without colliding with other objects.
- Verify the pan and tilt functions on the yoke are unlocked.
  Verify the EZ-Clamps are installed securely.

- Verify that the Quick Lock is locked and secured.

  Verify that the yoke is properly grounded.
- Verify that the AC power complies with the local building and electrical codes and has both overload and ground-fault (earth-fault) protection.
- Verify that all power distribution equipment and cables are in good condition and rated for the requirements of the connected devices.
- Verify that the DMX distribution has XLR 5 pin connectors.

5.3 Cleaning

5.3.1 Yoke

The plastic covers may be cleaned with water or alcohol 90.

5.3.2 Projector

Refer to the Maintenance section of the projector user manual.

5.4 Lubrication

5.4.1 Chains

Chain lubricant may be applied as needed to the pan and tilt chains and checked at a minimum of every 3 months.

5.5 User-Serviceable Components

The components detailed below may be serviced by the user. All other service must be performed by a Christie accredited service technician.

5.5.1 Yoke

Power Cable

Use only the AC power cable supplied. Do not attempt operation if the AC supply and cable are not within the specified voltage and power range.

If the power cable is damaged or worn, replace it with the replacement part recommended by ZAP Lighting dept of Cinemeccanica Company

Fuses

Disconnect the VIP Dual from power before replacing a fuse. Replace fuses with ones of the same type and rating. Never bypass or bridge a fuse. Covers shall only be removed by Cinemeccanica accredited service technicians.

The VIP Dual head box is protected by one fuse located in the fuse holder next to the power switch:
- T750mA for 200-240V

Two fuses are also located in Leg #2 of the Tripod. See ***Figure 5-1*** and ***Table 5-1***.
The transformer primary fuse is shown circled, and the secondary fuse (indicated by an arrow) is located in an inline fuse holder.

Description		Voltage Range	Fuse protection
POWER SUPPLY TRANSFORMER (150 VA)	PRIMARY	208-230 V	T1.6A (250V) - USE ONLY CONQUER ELECTRONICS CO., LTD # UTE1.60)
	SECONDARY	22 V	T6.3A (250V)- USE ONLY SCHURTER AG # 0034.3125

Table 5-1 Fuse values

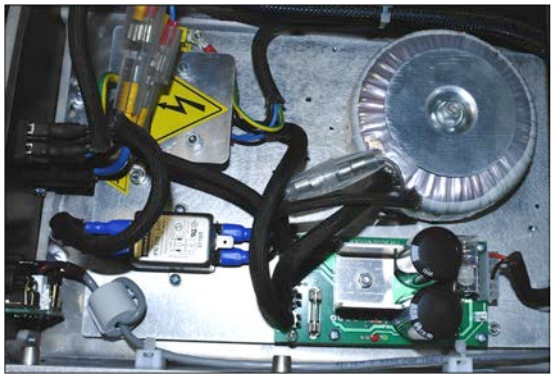

Figure 5-1 Power supply fuses

Chain

The chain tension should be checked every 3 months or less, depending on frequency of use.

5.5.2 Projector

If a lens is changed, projector balance must be assessed.

NOTICE! *With the VIP Dual power turned off and the tilt axis unlocked, balance is only achieved when the projector does not tilt on its own when set to tilt angles of 0°, 45° and 90°. As a result, it may be necessary to perform the balance adjustment more than once until this is achieved.*

6 Troubleshooting

This section provides information and procedures for resolving common issues with the VIP Dual. If the problem can't be resolved, contact your dealer for assistance.

NOTICE: *Only Cinemeccanica accredited technicians can perform service beyond the solutions listed in the Troubleshooting Chart.*

6.1 Yoke

Symptom	Action/Solution	Notes
No power (Red LED not lit on the control display panel)	Check MAIN ON/OFF switch is ON	
	Check that the Powercon connector (black) is properly locked on the power/DMX panel.	
	Check the power supply network	
	Check power supply fuses in LEG #2	
No reset (after switching the yoke on / Red LED is lit on the control display panel)	Check that PAN and TILT Locks are properly released	If not, release them, and switch the yoke on again.
	Check that PAN and TILT motor cables are properly connected on motherboard (CPU)	
The reset sequence does not run properly : The control panel doesn't display: "PAN=ok TILT=ok DMX=###"	PAN & TILT detection is not working:	
	Check PAN & TILT sensors input connection on the CPU	
	Check detection LED indicators (orange light) on the bottom of PAN & TILT sensors are on	
	Check PAN & TILT detection LED indicator on the CPU	
The reset sequence does not run properly (slowly): PAN or TILT starts with a high speed movement	Check motor cables and cables linking motors to CPU	
PAN & TILT movement are not linear (oscillate) when moving to a precise position	Check the PAN and TILT tension	
	For TILT : Check balance is properly adjusted for the model of lens installed in the projector	
PAN & TILT cannot be controlled via DMX Lighting console	Check DMX network linking Lighting console to the VIP Dual. Ensure that DMX cables used are certified DMX standard.	

	Check if DMX cable is properly plugged into "DMX IN" input , on the power/DMX panel	
	Check DMX reception LED indicator on the control display panel (green LED should be flashing)	
	Check that DMX address is properly set	
	Check that "PAN=ok TILT=ok DMX=###" is displayed on the control panel: DMX signals will start to be received only after the yoke reset is completed.	
No power to the Roadster series projector*	Check that power switch above power cord on projector is in the ON position.	
	Check that power cable is properly plugged and locked into the yoke sub connection panel under the vertical cover.	
No power to the head box (Red LED on the head box is not lit)	Check that the MAIN ON/OFF switch on the head box is ON	
	Check the powercon connector (blue) is properly locked on the power/DMX head box control display panel. Check that power supply cable is also properly connected to the yoke sub connection panel under the vertical cover.	
	Check power input fuse (external fuse holder on head box).	
	Remove the head box cover and check internal fuses.	
Roadster series projector doesn't work using DMX lighting console	Check DMX reception indicator on the head box control display panel (green LED flashing).	
	Ensure that projector internal communication parameter is set to 19200 Baud.	
	Check DMX cable linking head box to the VIP Dual yoke is properly plugged into the head box and into the yoke sub connection panel under the vertical cover.	
	Check head box DMX address is set at "1".	
	Check that RS232 cable (SUB-D connector) is properly connected to RS232 OUTPUT on the Roadster series projector.	
Video function (DMX channel #7) of the Roadster series projector doesn't work properly.	Remove head box cover and ensure the R232/DMX interface is properly set (jumper).	
Roadster zoom & focus module doesn't work	Check that cable linking head box to zoom/focus module is properly plugged in (SUB-D).	
	Remove head box cover and check LED indicators are lighting or flashing.	

Zoom & focus module movement is not linear.	Check that zoom/focus module is properly installed in the lens	
No video signal transmitted*	Check that DVI or Ethernet cable link is properly connected to the YK200 and to the rear panel of the Roadster series projector.	
	Check that DVI signal input is activated via the rear control panel of the Roadster series projector	

Table 6-1 Troubleshooting Chart

6.2 Projector

*Refer to the troubleshooting section of the projector user manuals .

7 Specifications

This section provides specifications for the VIP Dual. Due to continuing research, specifications are subject to change without notice.

7.1 General Capabilities

7.1.1 Pan and Tilt Movements

- High Resolution - 8 arc minutes precision – Ratio 64:1
- Linear command - Pan: 600°; Tilt: 270°
- DC servo motor – 24 Volts
- Maximum speeds: PAN: 8 sec TILT: 4.3 sec

7.1.2 Focus Control

- Remote - via DMX dedicated channels

7.1.3 Zoom Control

- Remote - via DMX dedicated channels

7.2 Physical

7.2.1 Yoke Dimensions

- H 1004 mm x W 830 mm x L 1183 mm
- H 39.5” x W 32.7” x L 46.6”
- Footprint - see ***Figure 7-1***

7.2.2 Yoke Body

- Body structure: Aluminum
- Cover: thermoformed plastic
- Color: grey-black
- Pan and Tilt Lock for transport and maintenance

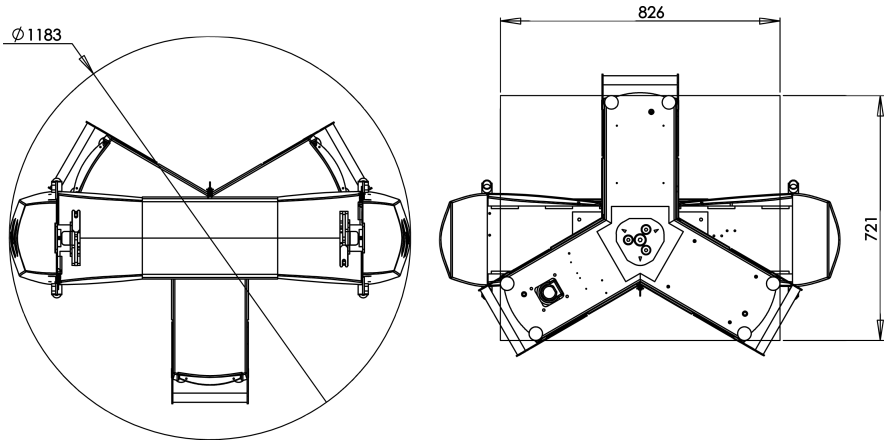

Figure 7-1 VIP Dual Footprint

7.2.3 Mounting Options

- Floor mounted, upright
- Truss mounted with EZ-Clamp: upright or inverted

7.3 Weights

7.3.1 VIP Dual

- 90 kg (198.4 lbs)

7.3.2 VIP Dual + Roadster Series Projector

- 200kg (440 lbs) without lens

7.4 Power Requirements

7.4.1 Voltage and Current

- Europe: 230 VAC@50/60 Hz single phase
- USA: 208 VAC@50/60 Hz dual phase
- Operating current (Yoke only): 1A at 230VAC; 1.8A at 208VAC
- Operating current (Yoke + Projector): 15A worst case
- Power consumption: 150W max

7.4.2 Fuses

- Head Box: T750mA
- Power Supply Primary: T1.6A (Conquer Electronics Co., Ltd # UTE1.60)
- Power Supply Secondary: T6.3A (Schurter AG # 0034.3125)

7.5 Flight Case

7.5.1 Dimensions

- See ***Figure 7-2***.

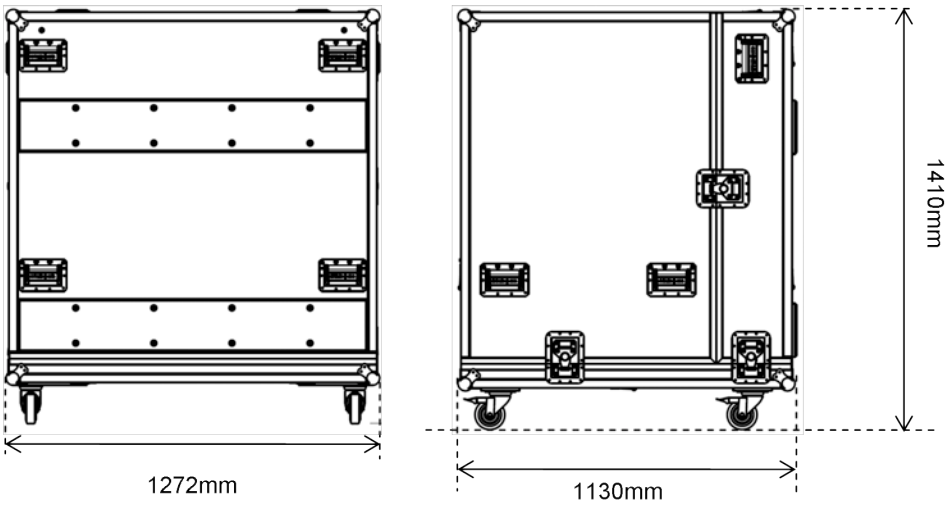

Figure 7-2 flight case dimensions

7.5.2 Weight

Empty

135 kg (297 lbs)

With VIP Dual + Roadster Series Projector

335 kg (737 lb) without lens

7.6 Regulatory

- CE
- CSA
- UL Listed

7.7 Environment

- Maximum ambient temperature (T_a max): 45°C (113°F)
- Minimum ambient temperature(T_i max): -5°C (23°F)